THOMSON MULTI MEDIA

Brandt FERGUSON **NORDMENDE** SABA **TELEFUNKEN** **THOMSON**

VIDEO

SERVICE MANUAL
DOCUMENTATION TECHNIQUE
TECHNISCHE DOKUMENTATION
DOCUMENTAZIONE TECNICA
DOCUMENTACION TECNICA

VIDEORECORDER

Chassis R 5000 MONO

NORDMENDE	SABA	TELEFUNKEN	THOMSON
V 1250 SVM	VR 7021	M 9523	VP 2601
V 1450 SVM	VR 7027	M 9625	VP 2651
V 1455 F	VR 7041	M 9655	VP 4601
V 1455 SENSAR		T 8000	VP 4681

WARNING : *Before servicing this chassis read the safety recommendations.*
ATTENTION : *Avant toute intervention sur ce châssis, lire les recommandations de sécurité.*
ACHTUNG : *Vor jedem Eingriff auf diesem Chassis, die Sicherheitsvorschriften lesen.*
ATTENZIONE : *Prima di intervenire sullo chassis, leggere le norme di sicurezza.*
IMPORTANTE : *Antes de cualquier intervención, leer las recomendaciones de seguridad.*

Code : 350 335 00 - 01 / 97

No copying, translation, modification on other use authorized. All rights reserved worldwide. • Tous droits de reproduction, de traduction, d'adaptation et d'exécution réservés pour tous les pays. • Sämtliche Urheberrechte an diesen Texten und Zeichnungen stehen uns zu. Nachdrucke, Vervielfältigungen - auch auszugsweise - nur mit unserer vorherigen Zustimmung zulässig. Alle Rechte vorbehalten. • I diritti di riproduzione, di traduzione, e esecuzione sono riservati per tutti i paesi. • Derechos de reproduccion, de traduccion, de adaptacion y de ejecucion reservados para todos los paises.

INHALTSVERZEICHNIS

	Seite
Abkürzungen	**4**
Explosionszeichnung des Gerätes	**5**
Service Setup Werte	**6**
Service Hinweise	**7-10**
Demontage des Gerätes	7
Austausch der Kopftrommeleinheit	8
Service Einstellungen (bis auf SENSAR Modelle)	8
Selbstdiagnose	8
Service Einstellungen für SENSAR Modelle	9-10
Elektrische Einstellungen	**10-14**
Servoteil	11-12
Videosignalteil	13
OSD	14
Audio Signalverarbeitung	14
Verdrahtungsplan	15-23
Messungen Netzteil Interface / Tuner / ZF	24
Netzteil Interface / Tuner / ZF Schaltbild	25-32
Netzteil Schaltbild	33-36
Netzteil Leiterplatte	37
Netzteil Leiterplatte (Sensar)	38
Netzteil Schaltbild (Sensar)	39-40
Blockschaltbild Leiterplatte Zeichensatzeinblendung	41
Zeichensatzeinblendung Leiterplatte	42
Schaltbild Zeichensatzeinblendung	43-45
ZF 4101 / 4101A	46
ZF 4112	47
ZF 4153 M	48
Sub Modul SECAM	49-50
Bedienteil mit Display (Schaltbilder und Leiterplatten)	51-90
Audio / Scart (Schaltbilder, Messungen und Leiterplatten)	91-108
Hauptleiterplatte (1. Version)	109-112
Bauteil Koordinaten Hauptleiterplatte	113-114
Hauptleiterplatte (2. Version)	115-118
Blockschaltbild Mechaniksteuerung / Servo	119-120
Messungen Mechaniksteuerung / Servo	121-122
Mechaniksteuerung / Servo Schaltbild	123-126
Blockschaltbild Video Signalverarbeitung	127-128
Messungen Video Signalverarbeitung	129-130
Video Signalverarbeitung Schaltbild	131-154
Ersatzteile	155

INDEX

	Page
Abbreviations	**4**
Video Recorder Overview	**5**
Service Setup Values	**6**
Service Notes	**7-10**
Disassembly	7
Exchange of the drum unit	8
Service Adjustments (except SENSAR models)	8
Auto Diagnostic	8
Service Adjustments for SENSAR models	9-10
Electrical adjustments	**10-14**
Servo Part	11-12
Video signal processing	13
OSD	14
Audio Signal processing	14
Wiring diagrams	15-23
Measurements Power Supply Interface / Tuner / IF Section	24
Power supply Interface / Tuner / IF section schematic diagrams	25-32
Power supply schematic diagrams	33-36
Power supply board	37
Power supply board (Sensar)	38
Power supply schematic diagram (Sensar)	39-40
Graphic board (Icons) block diagram	41
Graphic board (P.C.B.)	42
Graphic board schematic diagram	43-45 if
IF 4101 / 4101A	46
IF 4112	47
IF 4153 M	48
SECAM sub board	49-50
Key / Display	51-90
Audio / SCART	91-108
Main P.C.B. (1st version)	109-112
Components location	113-114
Main P.C.B. (2nd version)	115-118
Mecha deck control / Servo control block diagram	119-120
Measurements mecha deck control / Servo control	121-122
Mecha deck control / Servo control schematic diagram	123-126
Video signal processing block diagram	127-128
Measurements Video signal processing	129-130
Video signal processing schematic diagrams	131-154
Spare Parts	155

ABBREVIATIONS / ABREVIATIONS / ABKÜRZUNGEN / ABREVIATURAS

AC	Alternating Current
ACC	Automatic Colour Control
ACK	Automatic Colour Killer
AD.REF	Analog/Digital Converter Reference
AE	Audio Erase
AFC	Automatic Frequency Control
AGC	Automatic Gain Control
A_IF	Audio IF
ALC	Automatic Level Control
AMP	Amplifier
APC	Automatic Phase Control
AP.CONT	Aperture Control
AV	Audio-Video
A/V SWP	Audio/Video Switching Point (DRUM FF)
B.EMPH	Burst Emphasis
B.DEEMPH	Burst Deemphasis
BG	Burst Gate
BID	Burst Identification
BLK	Blanking
BPF	Band Pass Filter
CAP	Capstan
CBC	Cable Box Control (Satellite Control)
CCD	Charge Coupled Device
CH	Channel
CFG	Capstan Frequency Generator
CLK	Clock
COMP	Comparator
CONV	Converter
CPWM	Capstan Pulse Width Modulation
C-REG	Capstan Regulation
CR	Color Rotary
CS	Chip Select
CSYNC	Composite Synch
CTL	Control
DC	Direct Current
D.LIM	Double Limiter
DEEMPH	Deemphasis
DET	Detector
D-FG	Drum Frequency Generator
DFF	Drum Flip Flop
DIF.EQ	Differential Equalizer
DIG	Digital
DLY	Delay
DOC	Drop Out Compensation
E-E	Electronic-Electronic
EMPH	Emphasis
ENV	Envelope
EP	Extended Play
EQ	Equalizer
F.E	Full Erase
F.REW	Fast Rewind
F.FWD	Fast Forward
F/R	Forward/Rewind
FCB	Front Connection Board
FF	Fast Forward
FG	Frequency Generator
FMCI	FM Carrier Interleave
FWD	Forward
GND	Ground
GCA	Gain Controlled Amplifier
HASEL	Head Amplifier Select
HAB	Head Amplifier Board
HD	Horizontal Synch Pulse
HPF	High Pass Filter
I.R	Infra Red
ID	Identification
INP/IN	Input
KDB	Key Display Board
LIM	Limiter
LP	Long Play
LPF	Low Pass Filter
MESECAM	Middle East Secam
NC	Noise Canceller
OSD	On Screen Display
PB	Play Back
PB_C	Play Back Chroma
PCB	Printed Circuit Board
PDC	Program Delivery Control
PG	Pulse Generator
PH	Pseudo Horizontal Synch
PIF	Picture IF
PLL	Phase Locked Loop
PS	Phase Switch
PV	Pseudo Vertical Synch
PWM	Pulse Width Modulation
RCU	Remote Control Unit
REC	Record
REC_C	Record Chroma
REW	Rewind
REV	Reverse
SCL	Serial Clock
SDA	Serial Data
SEC	SECAM
SU REEL	Supply Reel
SMPS	Switch Mode Power Supply
SP	Standard Play
SS	Synch Separator
SW	Switch
TU REEL	Take Up Reel
TMB	Terminal Board
VCA	Voltage Controlled Amplifier
VCO	Voltage Controlled Oscillator
VCR	Video Cassette Recorder
VD	Supply Voltage Digital
VE	Voltage (Ever)
V_ENV	Video Envelope
V_IF	Video IF
VS	Voltage (Switched)
VM	Motor Voltage (Drum & Loading motor)
VMC	Motor Voltage (Capstan motor)
VPS	Video Program System
W/D	White/Dark
Y/C	Luminance/Chrominance

VIDEO RECORDER OVERVIEW - LOCALISATION DES ELEMENTS - EXPLOSIONSZEICHNUNG DES GERÄTES - VISIONE GENERALE DELL'APPARECCHIO - VISTA AMPLIADA DEL CONJUNTO

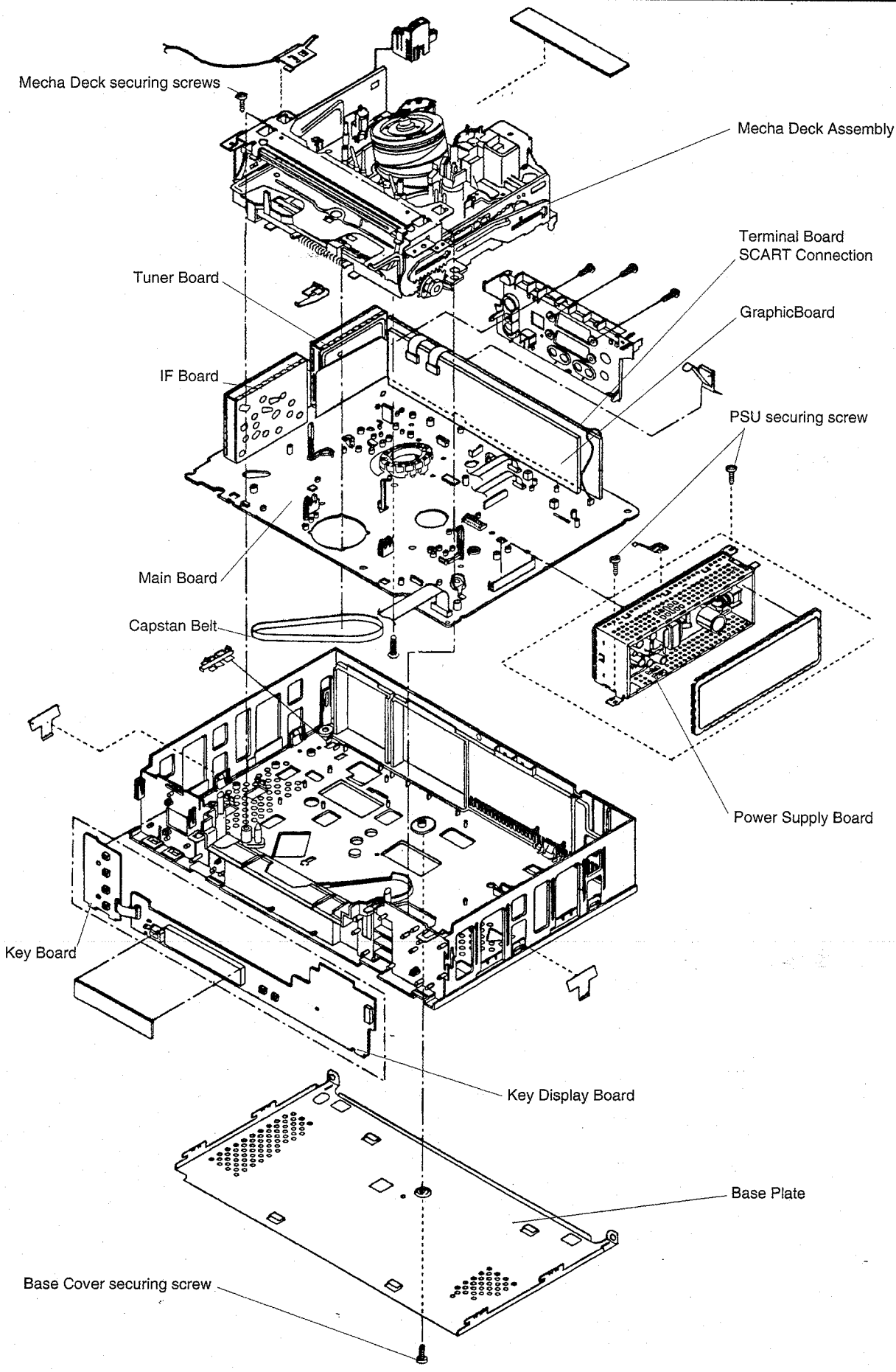

SERVICE SETUP VALUES - VALEURS DU SETUP (MODE SERVICE) - SERVICE MODE - VALORI SERVICE SETUP - VALORES DE CONFIGURACION DEL MODO SERVICIO

MODEL	SERVICE MODE																	
	1	2	3	4	5	6	7	8	9	10	11	12	13	14	15	16	17	18
V 1250 SVM	1	1	0	8	2	2	1	6	0	0	0	1	1	1	2	4	0	8
V 1450 SVM	1	1	0	8	2	2	1	7	2	0	0	1	1	1	2	4	0	8
VR 7021	5	1	0	8	1	2	1	6	0	0	0	1	0	9	0	0	0	0
VR 7027	5	0	0	1	1	0	1	6	4	0	0	1	0	9	2	0	0	4
VR 7041	5	1	0	8	1	2	1	7	2	0	0	1	0	9	0	4	0	0
M 9523	5	0	0	1	1	0	1	6	4	4	0	1	0	9	2	0	0	4
M 9625	4	1	0	8	2	2	1	7	0	4	0	3	1	1	2	4	0	8
M 9655	4	1	0	8	2	2	2	1	2	4	0	3	1	1	2	4	0	9
T 8000	5	1	0	8	1	2	1	6	0	0	0	0	0	8	0	0	0	0
VP 2601	5	1	0	8	1	2	1	6	0	0	0	1	0	9	0	0	0	0
VP 2651	0	1	0	8	2	2	1	7	0	4	0	3	1	1	2	4	0	8
VP 4601	0	1	1	0	2	1	1	7	2	0	0	1	1	1	2	4	0	8
VP 4681	0	1	0	8	2	2	2	1	2	4	0	3	1	1	2	4	0	9

- Service Mode Werte werden nicht für Sensar Modelle angezeigt und können nicht geändert werden.
- Service Setup values are not displayed for SENSAR models and thus cannot be altered.

1. Service Hinweise

1.1 Demontage des Gerätes

1.1.1 Gehäuse

a) 5 Schrauben an der Rückseite des Gehäuses herausdrehen.
b) Die zwei seitlichen Schrauben herausdrehen
c) Das Gehäuseoberteil leicht nach hinten ziehen und anheben.

1.1.2 Frontblende

a) 2 Schrauben an der Oberseite links und rechts vom Cassettenfach herausdrehen.
b) 2 Kunststoffzungen an der Oberseite anheben.
c) 2 Kunststoffzungen an der Unterkante der Frontblende anheben und die Frontblende abnehmen.
Hinweis: Während des Wiedereinbaus der Frontblende, muß die Cassettenklappe hinter dem Hebel liegen, auf der rechten Seite des Cassettenschachtes (halten Sie die Cassettenklappe in horizontaler Lage beim Einfügen in die Frontblende).

1.1.3 Bedienteil - Platte (KDB)

a) Ziehen sie die Stecker BK14 und BK06 heraus.
b) 2 Rastnasen an der Oberkante der Bedienteil-Platte anheben und Platte nach vorne/oben herausheben.

1.1.4 Front-Anschlußplatte (nicht bei allen Geräten)

a) Lösen Sie 2 Verriegelungen am oberen Teil der Platte, ziehen Sie die Platte nach vorn/oben, um sie abzunehmen.

1.1.5 Bodenplatte

a) Eine Schraube aus der Bodenplatte entfernen.
b) Lösen Sie die Verriegelung in der Mitte der Abschirmung (in der viereckigen Öffnung), drücken Sie die Abschirmung nach hinten, um sie frei zu machen.

1.1.6 Netzteil

a) Entfernen Sie 2 Schrauben .
b) Ziehen Sie die komplette Stomversorgung heraus.

1.1.7 Hauptleiterplatte kpl. mit Laufwerk

(Mecha Deck)
a) Die Schraube in der Mitte der Bodenplatte von unten entfernen.
b) Frontblende entfernen und die Steckverbindungen auf der Bedienteil-Platte lösen.
c) 2 Schrauben links und rechts (von oben) des Laufwerks herausdrehen.
d) Lösen Sie 3 Verriegelungen, welche die Hauptleiterplatte halten.
e) Machen Sie die Verriegelung hinter dem Gerät los.
f) Ziehen Sie die gesamte Einheit (Hauptleiterplatte und Laufwerk) heraus .

1.1.8 Cassettenschacht

Vorher Pkt. 1.1.7 durchführen.
a) 2 Schrauben links und rechts am Cassettenschacht lösen.
b) Den oberen Teil des Cassettenschachtes abheben.
c) Den Cassettenhalter bis zum vorderen Anschlag zurückziehen.
d) Heben Sie den Cassettenschacht auf der Seite der Trommel leicht an.
e) Machen Sie die weißen Hebel frei (links und rechts des Cassettenschachtes) und drücken Sie den Cassettenschacht zur Trommel bis die Führungsblöcke (an der hinteren Seite) aus den Führungsschienen kommen.
f) Ziehen Sie jetzt Sie den Cassettenschacht in der entgegengesetzten Richtung bis die Führungsblöcke (an der Vorderseite) ebenfalls aus den Führungsschienen kommen.

1.1.9 Hauptleiterplatte vom Laufwerk trennen

Vorher Pkt. 1.1.7 durchführen.
a) Steckverbindungen BT002 (am Funktions-Kontroll-Motor), BV001 (Kopftrommel) und BS031.
b) Eine, mit einem Pfeil markierte Schraube, von der Lötseite der Hauptplatine herausdrehen.
c) Antriebsriemen entfernen.
d) Leiterplatte entrasten (4 Clips) und abnehmen.

1. Service Notes

1.1 Disassembly

1.1.1 Top cover

a) Remove 5 screws from the top cover.
b) Pull the top cover slightly backwards and lift it.

1.1.2 Front panel

a) Remove two screws on the front left and right side of the cassette housing.
b) Bend the 4 top hooks of the front panel upwards to disengage them from their chassis retainers.
c) Disengage two lower hooks of the front panel and pull the front panel forward and downward to remove.
d) Note: During reinstallation of the front panel, the cassette flap must be positioned behind the lever, on the right-hand side of the cassette holder (hold the flap in a horizontal position while engaging the front panel).

1.1.3 Key Display Board

a) Disconnect both cable connectors on the KDB.
b) Disengage 3 hooks on the upper edge of the KDB and remove the board in a forward and upward direction.

1.1.4 Front connection board (not in all cases)

a) Release the two clips at the upper edge of the board and remove the board in a forward and upward direction.
b) Disconnect the cable connections.

1.1.5 Bottom cover

a) Remove the centre securing screw from the base.
b) Press on the clip through the circular hole of the bottom cover, push the cover to the back and lift it.

1.1.6 Power Supply Assembly

a) Remove 2 screws.
b) Remove the Power Supply Assy.

1.1.7 Main board Assembly with Mecha Deck

a) Remove the centre securing screw from the base.
b) Remove the front panel and disconnect both cable connectors on the KDB.
c) Remove the front connector board.
d) Remove 2 screws on the left and right of the Mechadeck.
e) Release the 3 clips holding the main deck.
f) Pull out the cassette housing upwards to remove the Mecha Deck with the main board .

1.1.8 Cassette housing

In order to do this procedure, step 1.1.7 .must have been completed.
a) Remove two screws at the left and the right side of the upper part of the cassette holder.
b) Remove the upper part of the cassette holder
c) Pull the remaining part to the upper end position.(Eject)
d) Lift the cassette holder at the side near to the drum.
e) Release the white levers (left and right of the cassette holder) and push the cassette holder towards the drum until the guide pins at the rear side come out of the guide rails.
f) Now pull the cassette holder in the opposite direction until the guide pins at the front side also come out of the guide rails.

1.1.9 Separate Main board from Mecha Deck

In order to do this procedure, step 1.1.7 .must have been completed.
a) Disconnect the cable connection BT002 (function control motor), BV001 (drum motor), BS031 (ACE Head).
b) Turn over the assembly and place on a clean surface.
c) Rremove one screw marked with an arrow from the solder side of the main board.

1.2 Austausch der Kopftrommeleinheit

Hinweis:
Um den oberen Teil der Trommel auszuwechseln, beziehen Sie sich bitte auf das Handbuch:

«Mechanische Einstellungen R4000»

1.3 Service Einstellungen

1.3.1 Einrichten der Bedienteil-Software

Es ist notwendig den KDB-Prozessor über die bestehende Hardware-Konfiguration zu informieren. Dies wird bereits ab Werk konfiguriert und in den EEPROM abgelegt.
1. Videorecorder vom Netz trennen.
2. Tasten "-" und "+" an der Frontseite gedrückt halten und dabei den Recorder am Netz anschließen.
3. Auf dem TV-Schirm werden 18 Ziffern angezeigt, die den aktuellen Zustand des Gerätes anzeigen.
Im Display erscheint "SETUP".
In diesem SERVICE EINSTELLUNGS-Modus können gewisse Werte in Funktion spezifischer Charakteristika eingegeben werden. Die 18 Ziffern, die Ihrem Gerät entsprechen finden Sie auf Seite 9.
4. Die jeweils einzustellende Ziffer blinkt auf dem Bildschirm. Die Eingaben werden mit den Zifferntasten auf der Fernbedienung durchgeführt. Nachdem alle 18 Ziffern eingegeben wurden, blinkt die erste Ziffer wieder.
5. Um die neuen Einstellungen abzuspeichern, drücken Sie bitte die STOP Taste. Sie können den Service Mode auch verlassen, ohne abzuspeichern. Dazu drücken Sie bitte die EXIT Taste auf der Fernbedienung.
Wenn Sie die neuen Werte abgespeichert haben, dauert es einige Sekunden, bis diese in das EEPROM geschrieben sind. Während dieser Zeit bleibt das Display dunkel.
6. Die Taste "Schneller Vorlauf (>>)" dient zur Auswahl der zweiten Seite des Service Modes. Diese Seite enthält die Funktion «Auto Diagnose». Sie finden mehr Details im Paragraph 1.4.
Hinweis:
Nach der Änderung der Einstellungen im Service Mode ist es erforderlich, den Kopftrommel - Umschaltpunkt neu zu setzen.

1.3.2 Kopf-Trommel-Umschaltpunkt

Legen Sie eine schreibgeschützte Meßcasette in das Videogerät. Die Wiedergabe startet automatisch. Wenn «START. E ---» angezeigt wird, drücken Sie die «STATUS»Taste auf der Fernbedienung. Drücken Sie gleichzeitig die Tasten «+»,«-» danach «PLAY » auf der Frontseite (Halten Sie die drei Tasten fest). Es wird "EINST." angezeigt. Das Videogerät bleibt im Wiedergabebetrieb. Beenden Sie nach eingen Sekunden diese Einstellung durch Drücken von «PLAY » auf der Frontseite.
(Sehen Sie unter § 2.2.4 betr. der elektrischen Einstellungen nach)

1.3.3 Sprachumschaltung

Taste "STATUS" der Fernbedienung gedrückt halten, bis die gewünschte Sprache im Display und auf dem Bildschirm erscheint.

1.4 Auto-Diagnose

Wenn ein mechanischer Fehler auftritt oder nach einem Bedienungsfehler, wird eine Zahl von 10 Ziffern, welche die Fehlfunktion darstellt, im EEPROM gespeichert.
Die angezeigte Zahl auf dem Schirm kann durch Vergleich mit der Tabelle auf S.6 hilfreich sein, das aufgetretene Problem zu lösen.

1.4.1 Anzeige einer Fehlermeldung

Die Fehlermeldung kann auf 2 Arten erfolgen:
a) Wenn die Seite «SERVICE EINSTELLUNGEN» auf dem Schirm ist, drücken Sie «<< Schneller Vorlauf «>>» auf der Fernbedienung.
b) Im **STOP oder STANDBY Modus**, wenn keine Anzeige auf dem Schirm ist, drücken Sie mindestens 10 Sekunden auf LÖSCHEN.

d) Remove the capstan belt.
e) Release 4 clips and lift off the main PCB.

1.2 Exchange of the drum unit

Note: To exchange the upper part of the drum unit, refer to the service manual :

«R4000 Drum Disassembly / Assembly Service Manual»

1.3 Service Adjustments (non SENSAR models)

1.3.1 KDB Software Set-Up

It is necessary to inform the KDB processor which hardware configuration is present. This is done in the factory and the selections stored in the EEPROM.
After replacing IT 004 (EEPROM) it is necessary to do again this configuration. Operate by the following procedure:
1. Disconnect the VCR from the mains supply.
2. Press and hold both « - » and « + » keys, on the front panel of the VCR and reconnect the mains supply.
3. Release « - » and « + » keys.
4. On the TV screen 18 digits are displayed, these represent the actual SETUP values for the VCR.
The VCR will display **«SETUP»** . In this Service Mode, some VCR type specification settings can be altered. The values assigned to each bit of the 18 digit code are given on page 9 for each VCR model number.
5. The first digit to be modified will flash, its value is input via the numerical keys on the RCU.
After input of all 18 digits, the first digit will flash again.
6. To **store** the new settings, press the **"STOP"** key on the RCU. It takes a few seconds to initialise the EEPROM, during this time the display will remain dark.
7. To **exit** the service "SETUP" mode without storing the new values press the **"EXIT"** key on the RCU.
The **"FAST FORWARD"** key on the RCU is used to select the second page of the Service Mode.
This page is used for AUTO DIAGNOSTIC functions.
More dtails about this function can be found in section 1.4 below.
Important note:
After modification of the settings in the Service mode, it will be necessary to carry out adjustment of the HEAD SWITCHING POINT.

1.3.2 Head switching point

1. Insert a protected alignment test cassette into the VCR.
The VCR will automatically enter PLAYBACK mode.
2. When the VCR display shows **"PLAY E—"**, press the **"STATUS"** key on the RCU.
3. Next simultaneously press the «+», «-» and **«PLAY»**keys on the front panel of the VCR. (Hold this pressure)
The VCR display will indicates **ADJ.**
4. The VCR will stay in the PLAYBACK mode. After a few seconds, terminate the adjustment mode by pressing the **«PLAY»** key on the front panel of the VCR. (see section 2.2.4 of the Electrical Adjustments)

1.3.3 Language selection

To choose the display menus language, press and hold the **"STATUS"** key on the RCU.

1.4 Auto Diagnostic

When a mechanical problem or operating error occurs, a 10-digit number representing the malfunction is stored in the EEPROM memory.
This number is displayed on the screen , when analysed it will assist in finding a solution to the problem encountered.

1.4.1 Error Message Display

The error message can be displayed in two ways:
a) When in the service **"SETUP"** mode, pressing the FAST FORWARD key**«>>»** on the RCU.
b) In the **"STOP" or "STANDBY" MODE**, press and hold the **"ERASE"** key on the RCU for more than 10 seconds.

1.4.2 Interpretation der Fehlermeldung

Die Bedeutung der verschiedenen Ziffern, welche die Fehlermeldung darstellen, wird in nachstehender Tabelle gegeben.

1.4.2 Interpretation of Error Message

To interpretative the meaning of the error message, please refer to the table below.

Number of digit	Meaning	Value
1 and 2	Target mechadeck and current mechadeck positions	1 - Wind 2 - Stop 3 - Standby 3 - Play 4 - Rev 5 - Loading / Unloading 6 - Off 7 - Eject F - Initial
3 and 4	Task servo is performing	00 - Stop 01 - FRew 02 - FF 04 - Play 11 - Rev 12 - Cue 44 - Record 84 - Still C4 - Rec Pause 40 - Rec / Rec P 10 - Search mode
5,6 and 7,8	Task active prior to abnormal off Normal Record Step Off Eject Stop Capbrake Initial Endless Record Endless Play Continuous Wind Search Still Play	bit 0 0 0 0 0 0 0 0 1 0 0 0 4 0 0 0 8 0 0 1 0 0 0 2 0 0 0 4 0 0 0 8 0 0 2 0 0 0 4 0 0 0 8 0 0 1 0 0 0 2 0 0 0 4 0 0 0 8 0 0 0
9 and 10	Abnormal flags	81 - Drum 82 - Left Reel 84 - Right Reel 88 - Task incomplete

1.5 Service Einstellungen für SENSAR Modelle

1.5.1 Einrichten der Bedienteil-Software

Der KDB Prozessor muß davon informiert werden, welche Gerätetype vorhanden ist. Dies wird im Werk vorgenommen und die entsprechende Eingabe wird im EEPROM abgespeichert.
Beim Austausch des IT 004 (EEPROM) muß der vorhandene Gerätetyp neu eingegeben werden. Dies funktioniert wie folgt:
1. Fernseher einschalten und Netzstecker des Recorders aus der Steckdose entfernen.
2. Auf der Frontplatte des Recorders die Tasten «**PLAY**» und «**STOP**» gedrückt halten und den Netzstecker wieder in die Netzsteckdose einstecken.
3. «**PLAY**»- und «**STOP**»- Tasten loslassen. Sie befinden sich im SET-UP Modus.
4. Auf dem Fernsehbildschirm erscheinen die 4 folgenden Werksnummern des Recorders :

R5049MS	R5249G
R5019MS	R5229G

5. Mittels der Fernbedienung wählen Sie, entsprechend der Modellnummer Ihres Gerätes, eine der folgenden Nummern aus:

R5049MS	für Modell	VP 4590 SENSAR
R5249G	für Modell	V 1445 SENSAR
R5019MS	für Modell	VP 2590 SENSAR
R5229G	für Modell	V 1255 SENSAR

1.5 Service Adjustments for Sensar models

1.5.1 KDB Software Set-Up

It is necessary to inform the KDB processor which hardware configuration is present. This is done in the factory and the selections stored in the EEPROM.
After replacing IT 004 (EEPROM) it is necessary to do again this configuration. Operate by the following procedure:
1. Disconnect the VCR from the mains supply.
2. Press and hold both « **PLAY** » and « **STOP**» keys, on the front panel of the VCR and reconnect the mains supply.
3. Release « **PLAY** » and « **STOP**» keys.
4. On the TV screen 4 factory references of VCR are displayed:

R 5049 MS	R5249G
R5019MS	R5229G

5. According to the VCR you own, select::

R 5049 MS	for	VP 4590 SENSAR
R 5249 G	for	V 1455 SENSAR
R 5019 MS	for	VP 2590 SENSAR
R 5229 G	for	V 1255 SENSAR

6. To store the configuration press the «**STOP**» key on the RCU.

7. To exit the service «SETUP» mode without storing the new values press the «**EXIT**» key on the RCU.

6. Zum Abspeichern der Einstellung drücken Sie die «**STOP**» Taste der Fernbedienung.
7. Zum Verlassen des SET-UP Modus ohne Abspeicherung der neuen Einstellung drücken Sie die «**EXIT**»-Taste der Fernbedienung.

Hinweis:
Nach einer Änderung der Konfiguration im Einstellmodus muß der Schaltpunkt der Wiedergabeköpfe neu eingestellt werden.

1.5.2 Einstellung des Schaltpunkts der Wiedergabeköpfe

1. Schreibgeschützte Spurausrichtungs-Testcassette in den Recorder einlegen. Er schaltet automatisch auf Wiedergabe.
2. An der Frontplatte des Geräts, die Taste «**PLAY ►** » drücken. Der Recorder schaltet auf «PAUSE».
3. An der Frontplatte nochmals auf «**PLAY ►** » drücken und Taste gedrückt halten.
4. An der Frontplatte jetzt zusätzlich «**STOP**» und «**STAND BY**» drücken und alle 3 Tasten gedrückt halten.
5. Der Recorder geht in den Einstellmodus.
6. Die 3 Tasten loslassen. Der Recorder bleibt im Wiedergabemodus (PLAYBACK).
7. Nach etwa 15 Sekunden können Sie den Testcassetten-Einstellvorgang durch Drücken der Taste «**PLAY ►** » an der Frontplatte des Recorders beenden. (siehe auch Kapitel 2.2.4 der elektrischen Einstellungen)

1.6 Selbstdiagnose

Sensar Modelle haben keine Selbstdiagnose.

Note:
After modification of the settings in the Service mode, it will be necessary to carry out adjustment of the HEAD SWITCHING POINT.

1.5.2 Head Switching Point Adjustment

1. Insert a protected alignment test cassette into the VCR. The VCR will automatically enter PLAYBACK mode.
2. Press the «**PLAY ►** » key on the front panel: the VCR goes to PAUSE mode.
3. Press once more the « **PLAY ►** » key on the front panel of the VCR and hold this pressure.
4. Press the «**STOP**» and «**STAND BY**» keys on the front panel of the VCR .
5. The VCR goes to adjustment mode.
6. Release all the 3 keys. The VCR will stay in the PLAYBACK mode.
7. After about 15 seconds, terminate the adjustment mode by pressing the «**PLAY ►** » key on the front panel of the VCR. (see section 2.2.4 of the Electrical Adjustments)

1.6 Auto Diagnostic

There is no Auto Diagnostic Mode for Sensar models.

2. ELECTRICAL ADJUSTMENTS - ELEKTRISCHE EINSTELLUNGEN

2.1. Test point and adjustment overview . Testpunkt- und Abgleich-Übersicht

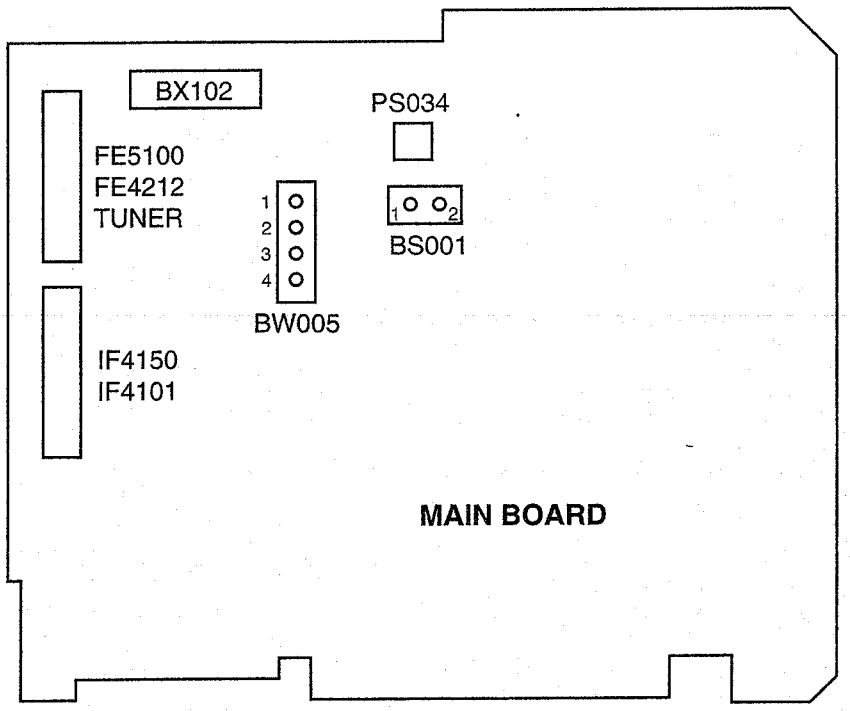

2.2. Measurements Servo Part - Main board (No SENSAR models)
Messungen Servoteil - Hauptleiterplatte (Nicht für SENSAR Geräte)

Note: low level < 0.8V; high level > 4.0V

Hinweis: L-Pegel < 0,8 Volt; H-Pegel > 4,0 Volt

N°	Item Einstellung	Mode & signal Betriebs-art	Test equipment Input signal Meßmittel Eingangssignal	Test point Meßpunkt	Adjustment Point Einstell-Punkt	Description Beschreibung
2.2.1	Oscillator frequency Oszillator Frequenz	SETUP MODE Service Einstellungs Modus	Frequency counter Frequenz-zähler	IT001 (pin 63) IT001 (pin 63)	PT001 PT001	Adjust for 4 MHz ± 40 Hz 4 MHz ± 40 Hz einstellen
2.2.2	Drum FF (A / V SWP) Kopftrommel-Flip-Flop	REC/PB REC/PB	Oscilloscope Oszilloskop	BW005 / 3 BW005 / 3	None Kein Abgleich	Confirm 25 Hz signal 25 Hz Signal überprüfen
2.2.3	Capstan FG frequency Capstan FG Frequenz	PB / REC (SP) PB / REC (SP)	Frequency counter Frequenz-zähler	IT001 (pin 44) IT001 (pin 44)	None Kein Abgleich	Confirm 757 Hz ± 10 Hz 757 Hz ± 10 Hz überprüfen
2.2.4	Head switching point	PB	Dual trace Oscilloscope Trigger ext. BW005/3 (Drum FF)	SCART AV1 (pin 19)	Adjustment by software setup	1. Insert alignment cassette. 2. When the display shows «PLAY E----» press the STATUS key on the RCU. 3. Press simultaneously«+» , «-» and «PLAY» key on the front panel. 4. Display shows «ADJ». 5. Confirm that the head switching point is 6.5 H ± 1H before vert. sync. 6. Terminate adjustment by pressing the «Play» key on the front panel. 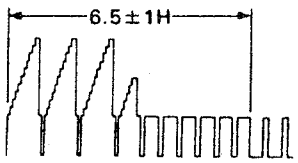
	Kopf-Trommel-Umschaltpunkt	PB	Zweistrahl-Oszilloskop; Externer Triggerpkt. BW005/3 (Drum FF)	SCART AV1 (pin 19)	Software-Einstellung	1. Geschützte Meßcassette einlegen 2. Taste "STATUS" auf Fernbedienung drücken, sobald Display "PLAY E---" anzeigt. 3. Tasten "+" und "-" gedrückt halten und zusätzlich Taste "PLAY ▶ " drücken. 4. Display zeigt "ADJ". 5. Prüfen, ob Kopfumschaltpunkt 6,5 H ±1 H vor dem Vertikal-Synchronimpuls liegt. 6. Beenden Sie die Einstellung durch Drücken der Taste "PLAY ▶ " des Videorecorders.

2.3. Measurements Servo Part - Main board (Sensar Models)
Messungen Servoteil - Hauptleiterplatte (Sensar Modelle)

Note: low level < 0.8V; high level > 4.0V

Hinweis: L-Pegel < 0,8 Volt; H-Pegel > 4,0 Volt

N°	Item Einstellung	Mode & signal Betriebs-art	Test equipment Input signal Meßmittel Eingangssignal	Test point Meßpunkt	Adjustment Point Einstell-Punkt	Description Beschreibung
2.3.1	Oscillator frequency Oszillator Frequenz	Setup mode Service Einstellungs Modus	Frequency counter Frequenz-zähler	IT 001 pin 63 IT001 (pin 63)	PT 101 PT001	Set in SERVICE MODE Adjust for 4 MHz ± 40 Hz 4 MHz ± 40 Hz einstellen
2.3.2	Drum FF (A / V SWP) Kopftrommel-Flip-Flop	REC / PB REC/PB	Oscilloscope Oszilloskop	BW005 / 3 (test connector) BW005 / 3	None Kein Abgleich	Confirm 25 Hz signal 25 Hz Signal überprüfen
2.3.3	Capstan FG frequency Capstan FG Frequenz	PB / REC (SP) PB / REC (SP)	Frequency counter Frequenz-zähler	IT001 (pin 44) IT001 (pin 44)	None Kein Abgleich	Confirm 757 Hz ± 10 Hz 757 Hz ± 10 Hz überprüfen
2.3.4	Head switching point	PB	Dual trace Oscilloscope Trigger ext. BW005/3 (Drum FF)	SCART AV1 (pin 19)	Adjustment by software setup	1. Insert alignment test cassette. 2. Press the «PLAY» key on the front panel. 3.Press once more the «PLAY» key and hold this pressure. 4. Press simultaneously «STOP», and «STAND BY» keys on the front panel. 5. The VCR goes to adjustment mode. 6. Release all the 3 keys. 7. After about 15 seconds,terminate the adjustment by pressing the «PLAY» key on the front panel. 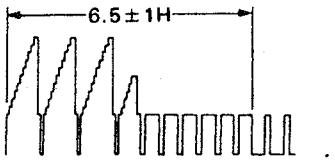
	Kopf-Trommel-Umschaltpunkt	PB	Zweistrahl-Oszilloskop; Externer Triggerpkt. BW005/3 (Drum FF)	SCART AV1 (pin 19)	Software-Einstellung	1. Schreibgeschützte Spurausrichtungs-Testcassette in den Recoder einlegen. Er schaltet automatisch auf Wiedergabe. 2. An der Frontplatte des Geräts, die Taste «PLAY» drücken. Der Recorder schaltet auf «PAUSE». 3. An der Frontplatte nochmals auf «PLAY» drücken und Taste gedrückt halten. 4.An der Frontplatte jetzt zusätzlich «STOP» und STAND BY drücken und alle 3 Tasten gedrückt halten. 5.Der Recorder geht in den Einstellmodus. 6. Die 3 Tasten loslassen. Der Recorder bleibt im Wiedergabemodus (PLAYBACK) 7. Nach etwa 15 Sekunden können Sie den Testcasseten Einstellvorgang durch Drücken der Taste «PLAY» an der Frontplatte des Recorders beenden

2.4. Video signal processing (Main board)
Videosignalteil (Hauptleiterplatte)

N°	Item Einstellung	Mode & signal Betriebs-art	Test equipment Input signal Meßmittel Eingangssignal	Test point Meßpunkt	Adjustment Point Einstell-Punkt	Description Beschreibung
2.4.1	EE Level E-E - Pegel	EE Colour bar 1Vpp (AV1 pin20) E-E Farb-balken, 1V ss (AV1 pin20)	Oscilloscope Oszilloskop	AV1 pin 19 (without load) Anschluß 19 von AV1 ohne Scartstecker	None Kein Abgleich	Check for 2.0Vpp±0.1Vpp 2.0 Vss ±0,1 Vss messen
2.4..2	FM REC level FM-Aufnahme-Pegel	REC without signal REC ohne Signal	Oscilloscope Oszilloskop	TV200 (emitter) TV200 (Emitter)	None Kein Abgleich	Check for 300mVpp 300 mVss überprüfen
2.4.3	PAL chroma REC level PAL Farbaufnahme-Pegel	REC PAL colour bar 1Vpp (AV1 pin20) REC PAL Farb-balken 1V ss (AV1 pin20)	Oscilloscope Oszilloskop	IV001 (pin 38) IV001 (pin 38)	None Kein Abgleich	Check for 200mVpp±10% burst amplitude 200 mVss ±10 % Burstamplitude überprüfen
2.4.4 (Not for all sets) Nur für Multi-standard-geräte	SECAM Anti Bell filter (1.0715 MHz) Anti Bell Filter SECAM (1.0715 MHz)	REC SECAM colour bar 1Vpp (AV1 pin20) REC SECAM Farb-balken 1V ss (AV1 pin20)	Oscilloscope Oszilloskop	3/BC100 3/BC100	PC103 PC103	Adjust such that the magenta bar in R-Y and B-Y have the same amplitude So einstellen, dass die Magentabalken in R-Y und B-Y dieselbe Amplitude haben
2.4.5 (Not for all sets) Nur für Multi-standard-geräte	SECAM Bell filter (4.286 MHz) Bell Filter SECAM (4.286 MHz)	REC SECAM col. 1Vpp (AV1 pin20) Farb-balken 1V ss (AV1 pin20)	Oscilloscope Oszilloskop coul. 1Vpp	IC100 (pin 26) IC100 (pin 26)	PC104 PC104	Adjust such that the magenta bar in R-Y and B-Y have the same amplitude So einstellen, daß die Magentabalken in R-Y und B-Y dieselbe Amplitude haben
2.4.6 (Not for all sets) Nur für Multi-standard-geräte	SECAM chroma REC level SECAM Farbaufnahme-Pegel	REC SECAM colour bar 1Vpp (AV1 pin20) REC SECAM Farb-balken 1V ss (AV1 pin20)	Oscilloscope Oszilloskop	3/BC100 3/BC100	None Kein Abgleich	Check for 100mVpp±10% magenta bar amplitude Magenta Farbbalken auf eine Amplitude von 100 mVss ±10 % überprüfen

2.5. On screen display (Main board)
OSD - Hauptleiterplatte

N°	Item Einstellung	Mode & signal Betriebs-art	Test equipment Input signal Meßmittel Eingangssignal	Test point Meßpunkt	Adjustment Point Einstell-Punkt	Description Beschreibung
2.5.1	OSD chroma oscillator OSD Chroma-Oscillator		Frequency counter Frequenzzähler	Via 4k7 to IT001 (pin78) pin78 IT001 über 4k7	None Kein Abgleich	Confirm 17.734475MHz±500Hz Überprüfen der 17,734475 MHz ± 500 Hz .

2.6. Audio signal processing (Main board) - Audio Signalverarbeitung-Hauptleiterplatte

N°	Item Einstellung	Mode & signal Betriebs-art	Test equipment Input signal Meßmittel Eingangssignal	Test point Meßpunkt	Adjustment Point Einstell-Punkt	Description Beschreibung
2.6.1	Bias oscillator frequency Löschoszillator Frequenz	REC (without signal) REC (ohne Signal)	frequency counter (high impedance probe) Frequenzzähler über 10:1 Tastkopf	BS031 / 1 BS031 / 1	None None	Check for 72 kHz ±7 kHz Prüfen, f = 72 kHz ±7 kHz
2.6.2	Bias level adjustment Vormagne-tisierungs-Einstellung	REC (without signal) REC (ohne Signal)	Oscilloscope Millivoltmeter Oszilloskop Milli-Voltmeter	BS031 / 3 BS001 1-2 BS031 / 3 BS001 1-2	PS034 PS034	Adjust for V = 60Vpp ±10V alternatively Adjust for V = 3mV ± 0.1mV Auf V = 60Vss ±10V einstellen alternativ Auf V = 3mV ± 0,1mV einstellen

WIRING DIAGRAM - SCHEMA D'INTERCONNEXIONS - VERDRAHTUNGSPLAN - DIAGRAMMA DELLE INTERCONNESSIONI - ESQUEMA DE INTERCONEXIONES

(M 9523 - M 9625 - M 9655 - T 8000 - VP 4601)

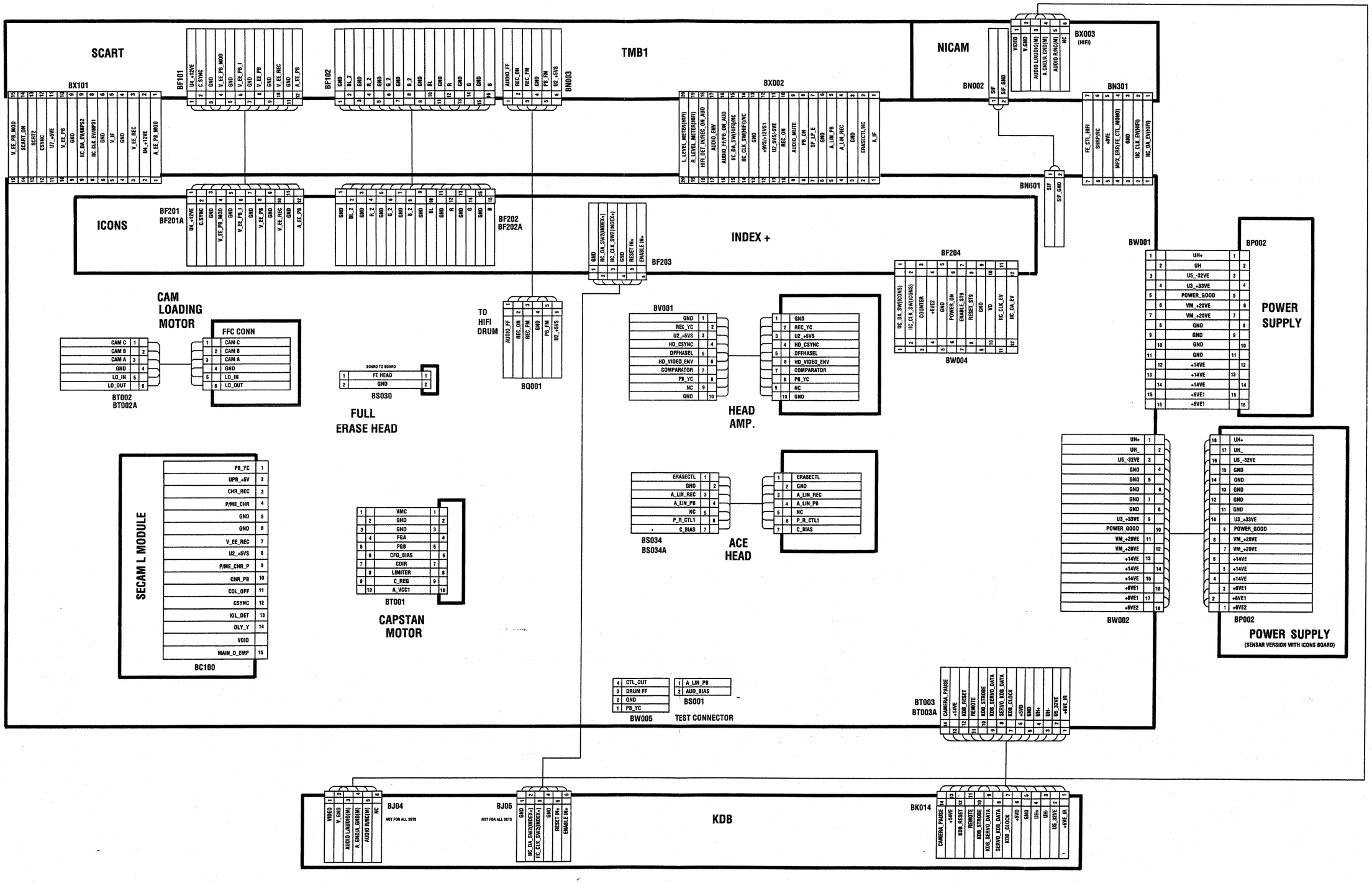

WIRING DIAGRAM - SCHEMA D'INTERCONNEXIONS - VERDRAHTUNGSPLAN - DIAGRAMMA DELLE INTERCONNESSIONI - ESQUEMA DE INTERCONEXIONES

(V 1250 SVM - V 1450 SVM)

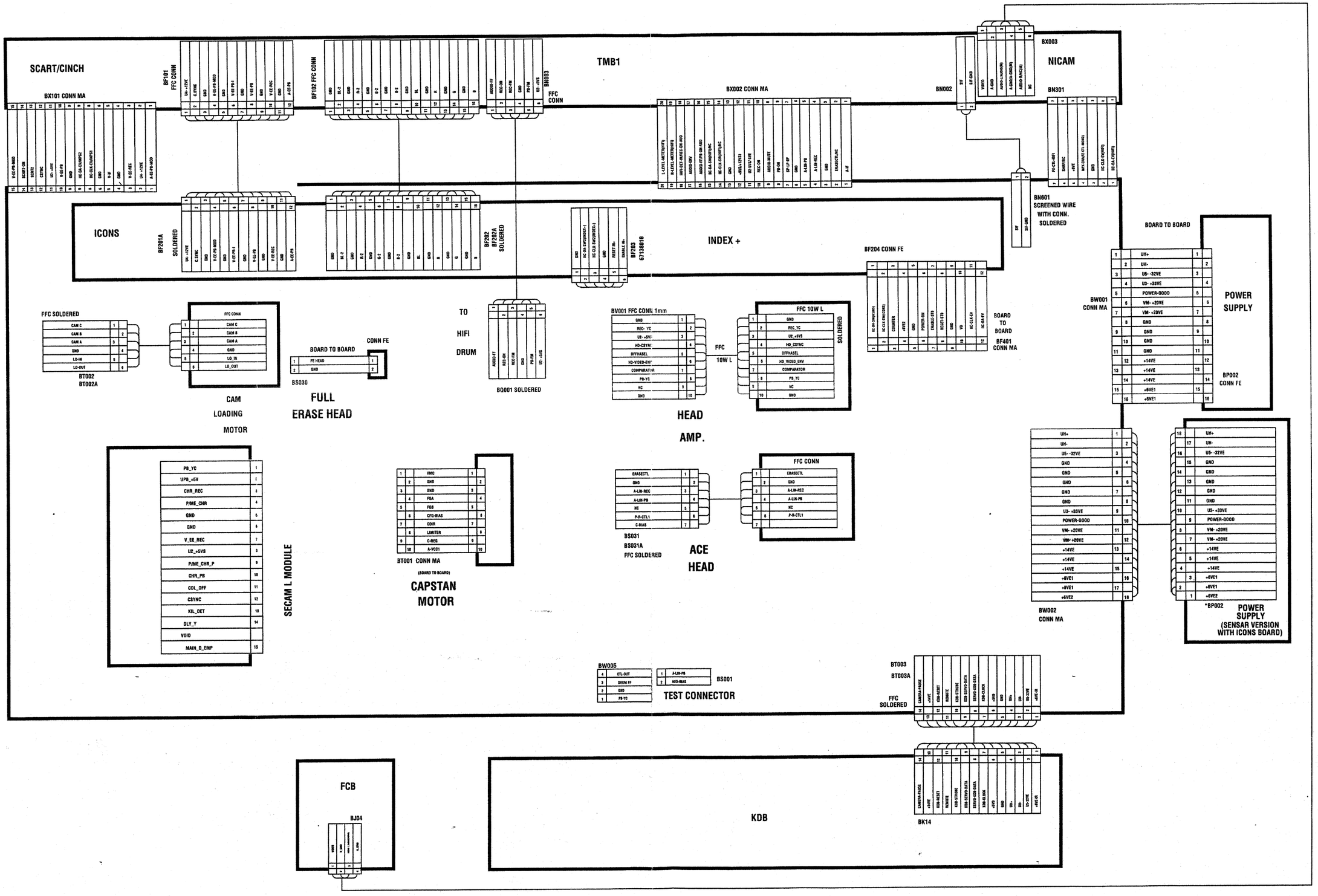

WIRING DIAGRAM - SCHEMA D'INTERCONNEXIONS - VERDRAHTUNGSPLAN - DIAGRAMMA DELLE INTERCONNESSIONI - ESQUEMA DE INTERCONEXIONES

(VR 7027)

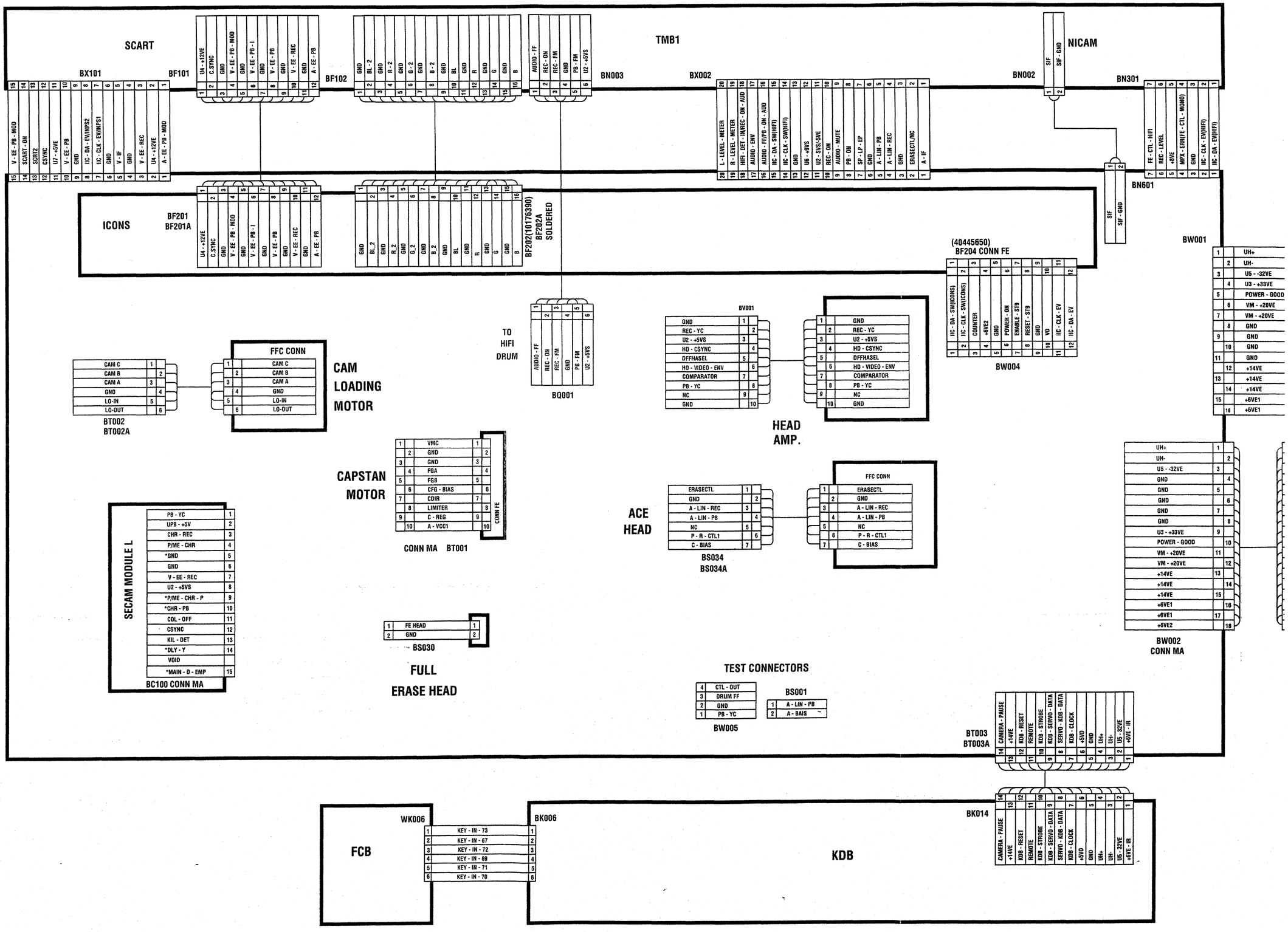

TUNGSPLAN - DIAGRAMMA

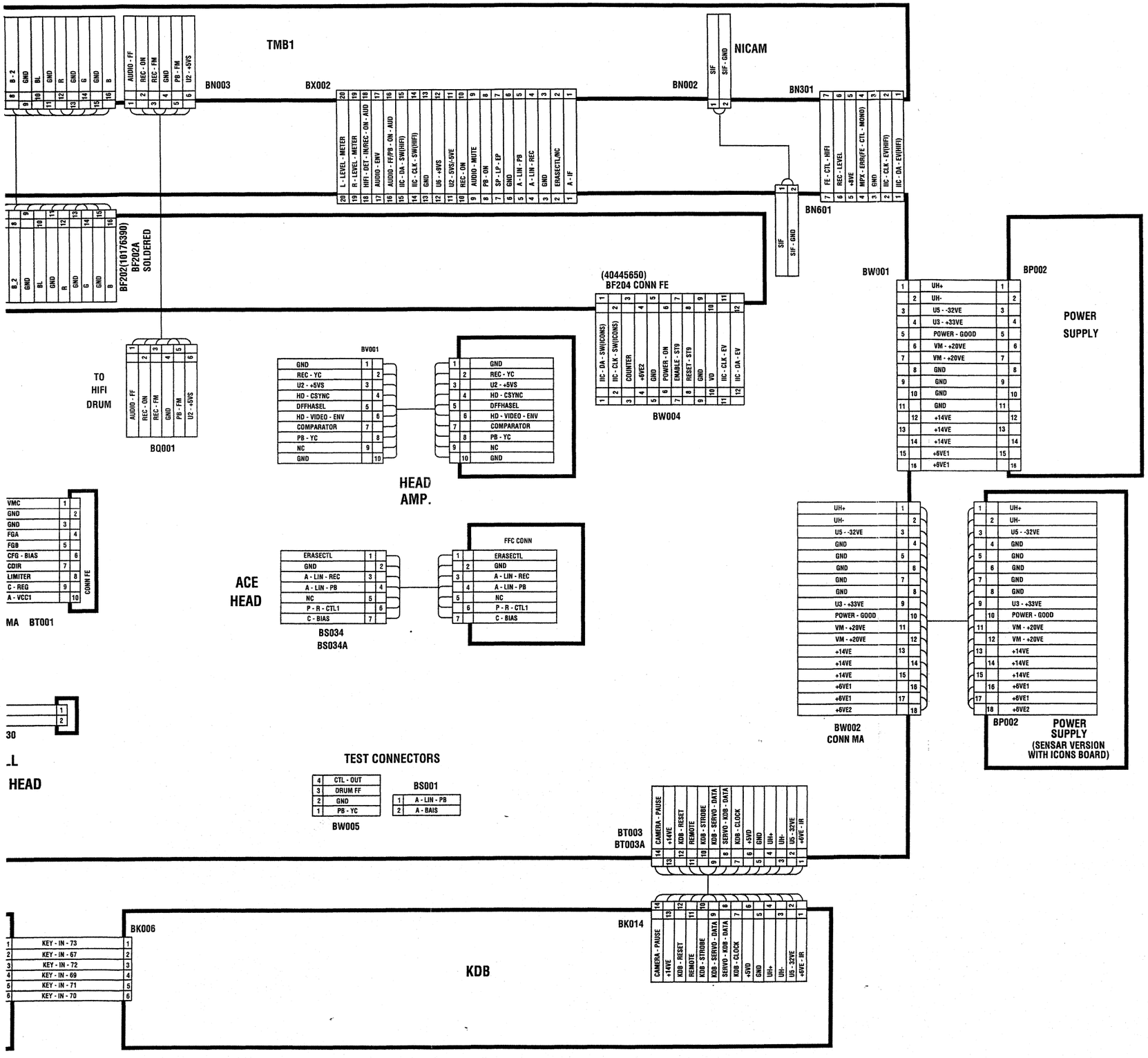

WIRING DIAGRAM - SCHEMA D'INTERCONNEXIONS - VERDRAHTUNGSPLAN - DIAGRAMMA DELLE INTERCONNESSIONI - ESQUEMA DE INTERCONEXIONES

(VP 2601 - VP 2651 - VP 4681 - V 1455 SENSAR - VR 7021 - VR 7041))

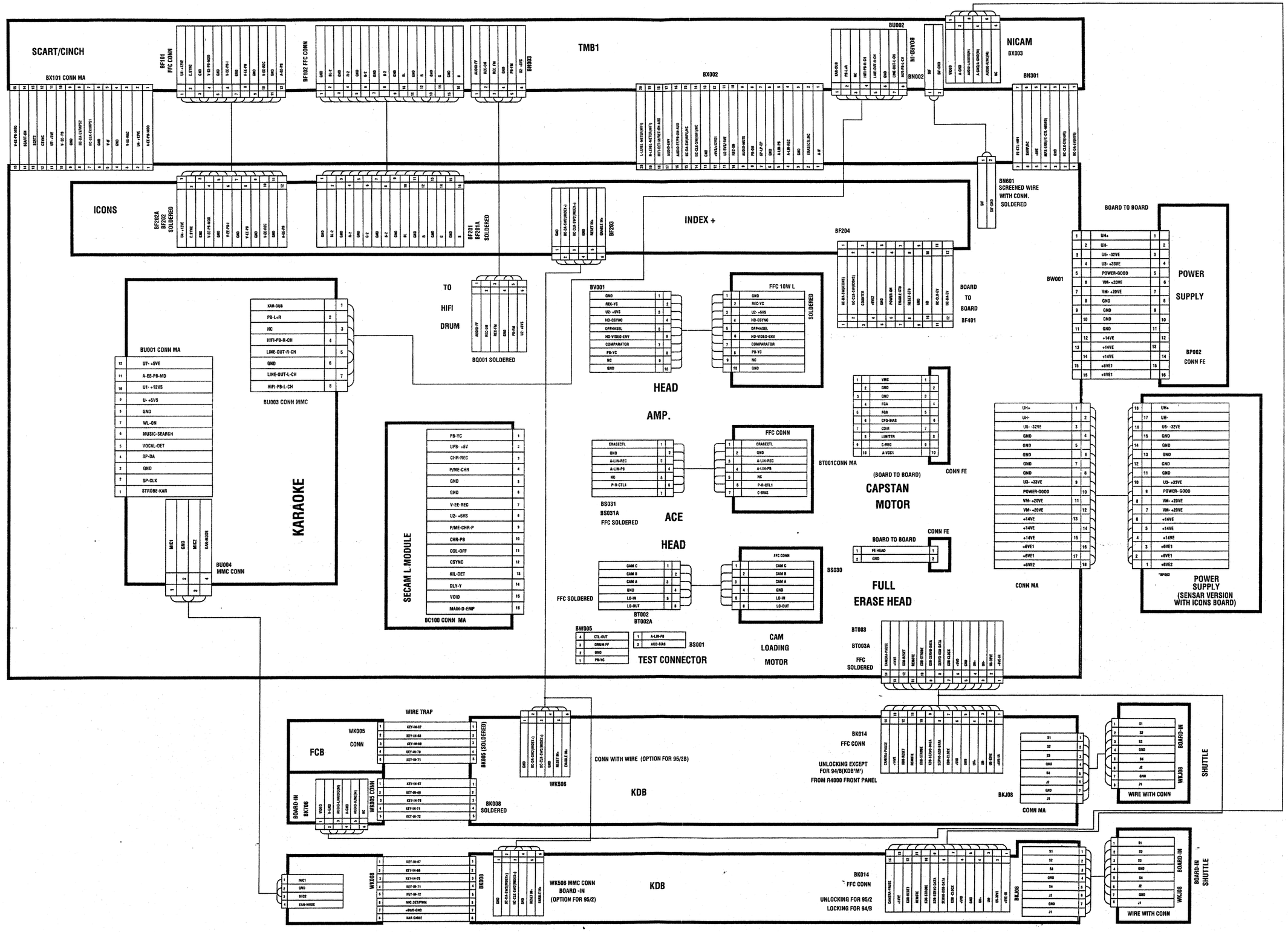

MEASU
INTE
MI

INTERFA	
LOC	F
TUNER SENSAR	
IF SENSAR	
IS101	
IS102	

Update

GSPLAN - DIAGRAMMA

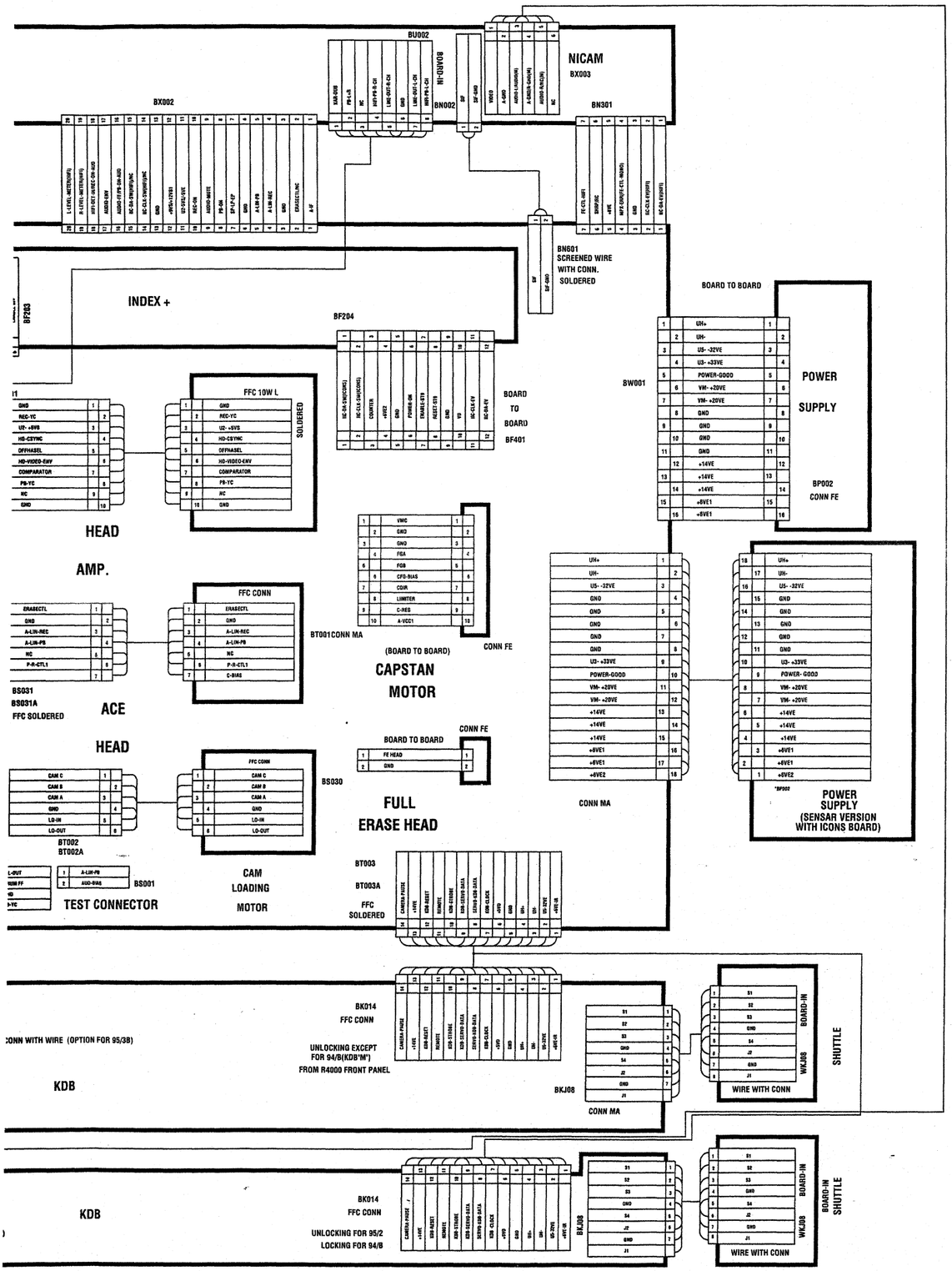

MEASUREMENTS POWER SUPPLY INTERFACE / TUNER / IF SECTION - MESURES INTERFACE / TUNER / IF - MESSUNGEN NETZTEIL INTERFACE / TUNER / ZF - MISURE INTERFACCIA ALIMENTAZIONE / TUNER / IF - MEDIDAS INTERFAZ ALIMENTACIÓN / TUNER / IF

INTERFACE		MODE		
LOC	PIN	EE	PLAY	REC.
TUNER	1	0	0	0
SENSAR	2	4.8	4.8	4.8
	3	7.4	7.4	7.4
	4	12.1	12.1	12.1
	5	0	0	0
	6	0	0	0
	7	12.2	12.2	12.2
	8	5.5	5.5	5.5
	9	32	32	32
	10	4.8	4.8	4.8
	11	4.6	4.6	4.6
	12	1.2	1.2	1.2
	13	1.9	1.9	1.9
IF	1	1.9	1.9	1.9
SENSAR	2	4.3	4.3	4.3
	3	1.2	1.2	1.2
	4	0	0	0
	5	7.5	7.5	7.5
	6	5.8	5.8	5.8
	7	6.7	6.7	6.7
	8	0	0	0
	9	12.2	12.2	12.2
	10	0	0	0
IS101	1	3.2	3.2	3.2
	2	-	-	-
	3	3.5	3.5	3.5
	4	3.5	3.5	3.5
	5	-	-	-
	6	0	0	0
	7	5	5	5
	8	0	0	0
	9	0	0	0
	10	0	0	0
	11	0	0	0
	12	3.1	3.1	3.1
	13	3.1	3.1	3.1
	14	3.1	3.1	3.1
	15	3.2	3.2	3.2
	16	5	5	5
IS102	1	0	0	0
	2	2.4	2.4	2.4
	3	4.5	4.5	4.5
	4	5.2	5.2	5.2
	5	5.2	5.2	5.2
	6	2.4	2.4	2.4

INTERFACE		MODE		
LOC	PIN	EE	PLAY	REC.
	7	3.1	3.1	3.1
	8	4	4	4
	9	3.2	3.2	3.2
	10	0	0	0
	11	0	0	0
	12	0	0	0
	13	3.5	3.5	3.5
	14	3.5	3.5	3.5
TG029	E	0	0	0
	B	0	0	0
	C	10.6	11.4	10.7
TG030	E	0	0	0
	B	0	4.8	0
	C	12.4	0.2	12.4
TG031	E	12.4	12	12.4
	B	12.4	11.2	12.4
	C	10.6	12	10.7
TN430	E	13.6	13.6	0
	B	13.8	13.8	0
	C	13.9	13.9	13.8
TN439	E	0	0	0
	B	0	0	0.8
	C	13.5	13.5	0
TS030	E	0	0	0.2
	B	0	0	0.2
	C	13.9	13.9	13.4
TS039	E	0	0	4.3
	B	0	0	4.8
	C	13.9	13.9	13.4
TS119	E	0	0	0
	B	0	4.7	0
	C	4	0	4
TW001	E	0	0	0
	B	0.6	0.6	0.6
	C	0	0	0
TW002	E	33.5	33.5	33.5
	B	0	0	0
	C	33.5	33.5	33.5

INTERFACE		MODE		
LOC	PIN	EE	PLAY	REC.
TW003	E	12.2	12.2	12.2
	B	12.9	12.9	12.9
	C	12.4	12.4	12.4
TW005	E	5.1	5.1	5.1
	B	5.9	5.9	5.9
	C	5.5	5.5	5.5
TW006	E	4,2	4,2	4,2
	B	5.1	5.1	5.1
	C	0	0	0
TW009	E	0	0	0
	B	0	0	0
	C	5	5	5
TZ001	E	0	0	0
	B	0	0	0
	C	7.5	7.5	7.5
TZ019	E	0	0	0
	B	4.9	4.9	4.9
	C	0	0	0
TZ020	E	0	0	0
	B	0	0	0
	C	4.3	4.3	4.3
TZ031	E	1.8	1.8	1.8
	B	2.4	2.4	2.4
	C	10.5	10.5	10.5
TZ032	E	2.5	2.6	2.6
	B	1.8	1.9	2
	C	0	0.1	0
TZ050	E	5.2	5.2	5.2
	B	5.9	5.9	5.9
	C	12	12	12
TZ051	E	2.6	2.6	2.6
	B	1.9	1.9	1.9
	C	0	0	0
TZ057	E	2.6	2.6	2.6
	B	1.9	1.9	1.9
	C	0	0	0

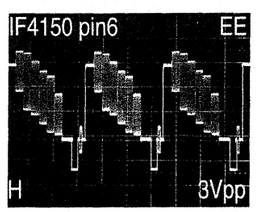

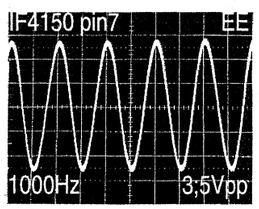

POWER SUPPLY INTERFACE / TUNER / IF SECTION - INTERFACE ALIMENTATION / TUNER / FI - NETZTEIL INTERFACE / TUNER / ZF - INTERFACCIA ALIMENTAZIONE / TUNER / IF - INTERFAZ ALIMENTACIÓN / TUNER / IF

V 1455 SENSAR

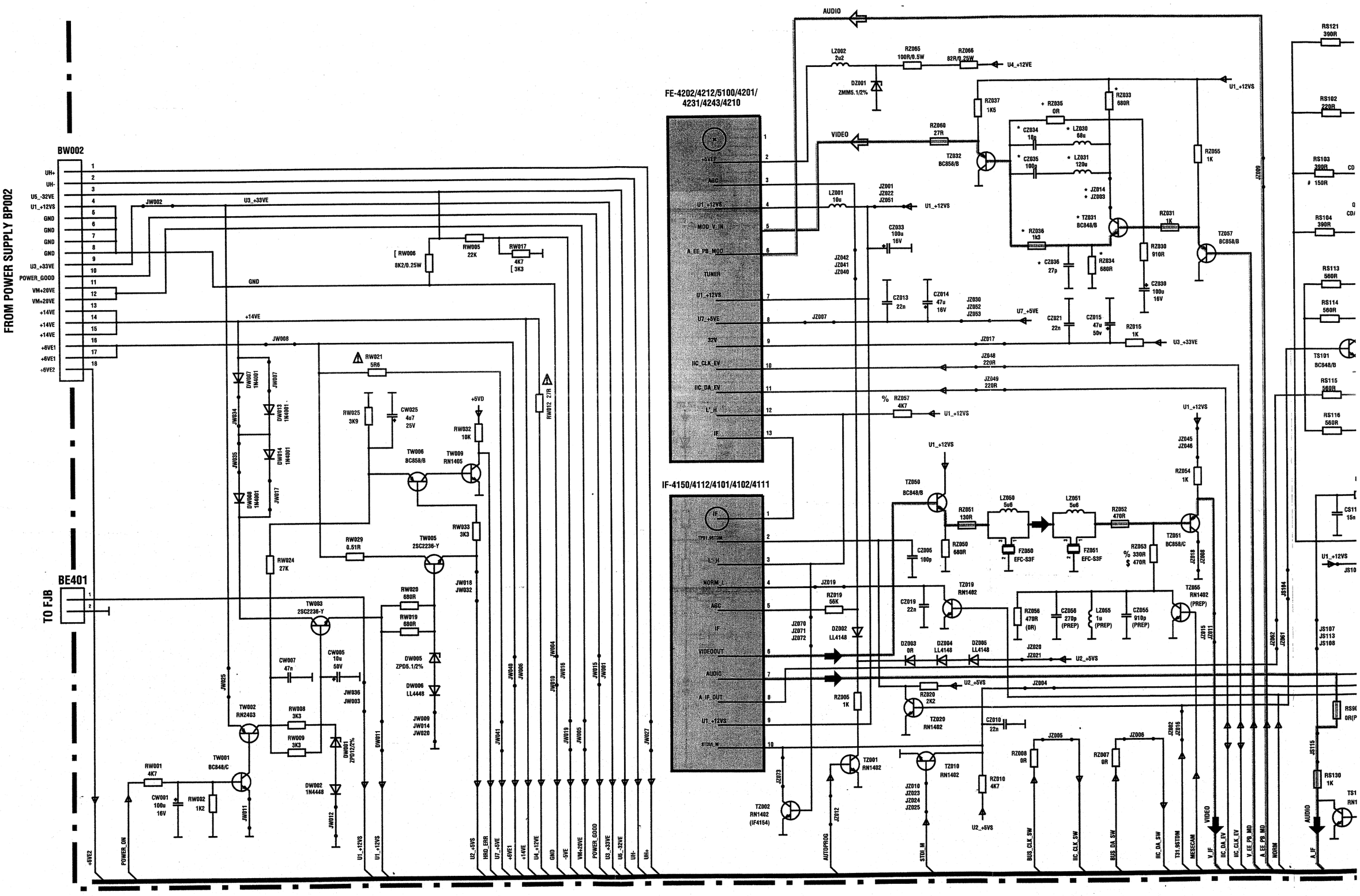

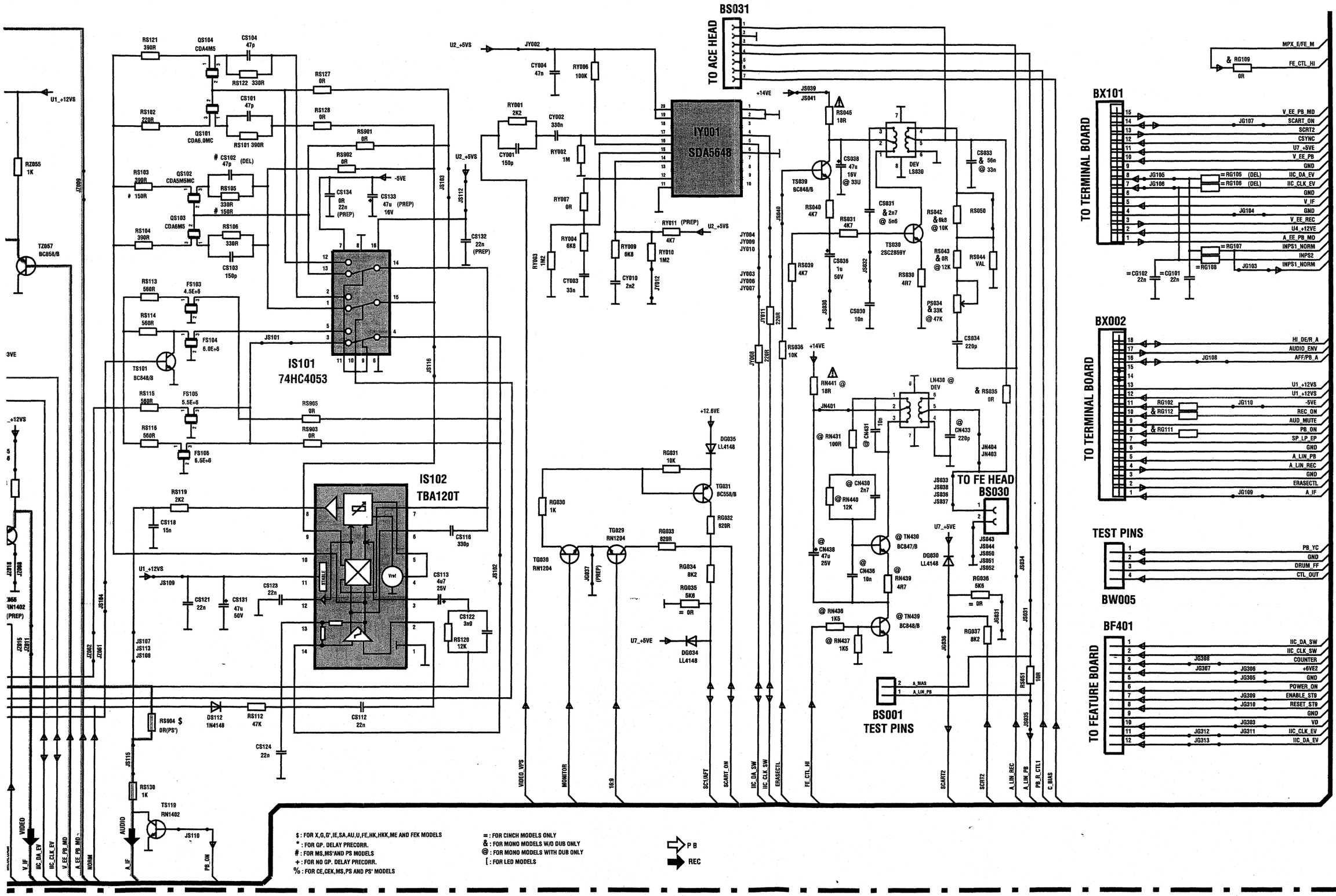
BS031
TO ACE HEAD
IY001
SDA5648
IS101
74HC4053
IS102
TBA120T
TO FE HEAD
BS030
BS001
TEST PINS
BX101
TO TERMINAL BOARD
BX002
TO TERMINAL BOARD
TEST PINS
BW005
BF401
TO FEATURE BOARD
$: FOR X,G,G',IE,SA,AU,U,FE,HK,HKK,ME AND FEK MODELS
* : FOR GP. DELAY PRECORR.
# : FOR MS,MS'AND PS MODELS
+ : FOR NO GP. DELAY PRECORR.
% : FOR CE,CEK,MS,PS AND PS' MODELS
= : FOR CINCH MODELS ONLY
& : FOR MONO MODELS W/O DUB ONLY
@ : FOR MONO MODELS WITH DUB ONLY
[: FOR LED MODELS
P B
REC

POWER SUPPLY INTERFACE / TUNER / IF SECTION - INTERFACE ALIMENTATION / TUNER / FI - NETZTEIL INTERFACE / TUNER / ZF - INTERFACCIA ALIMENTAZIONE / TUNER / IF - INTERFAZ ALIMENTACIÓN / TUNER / IF (VP 2550 / VP 4550)

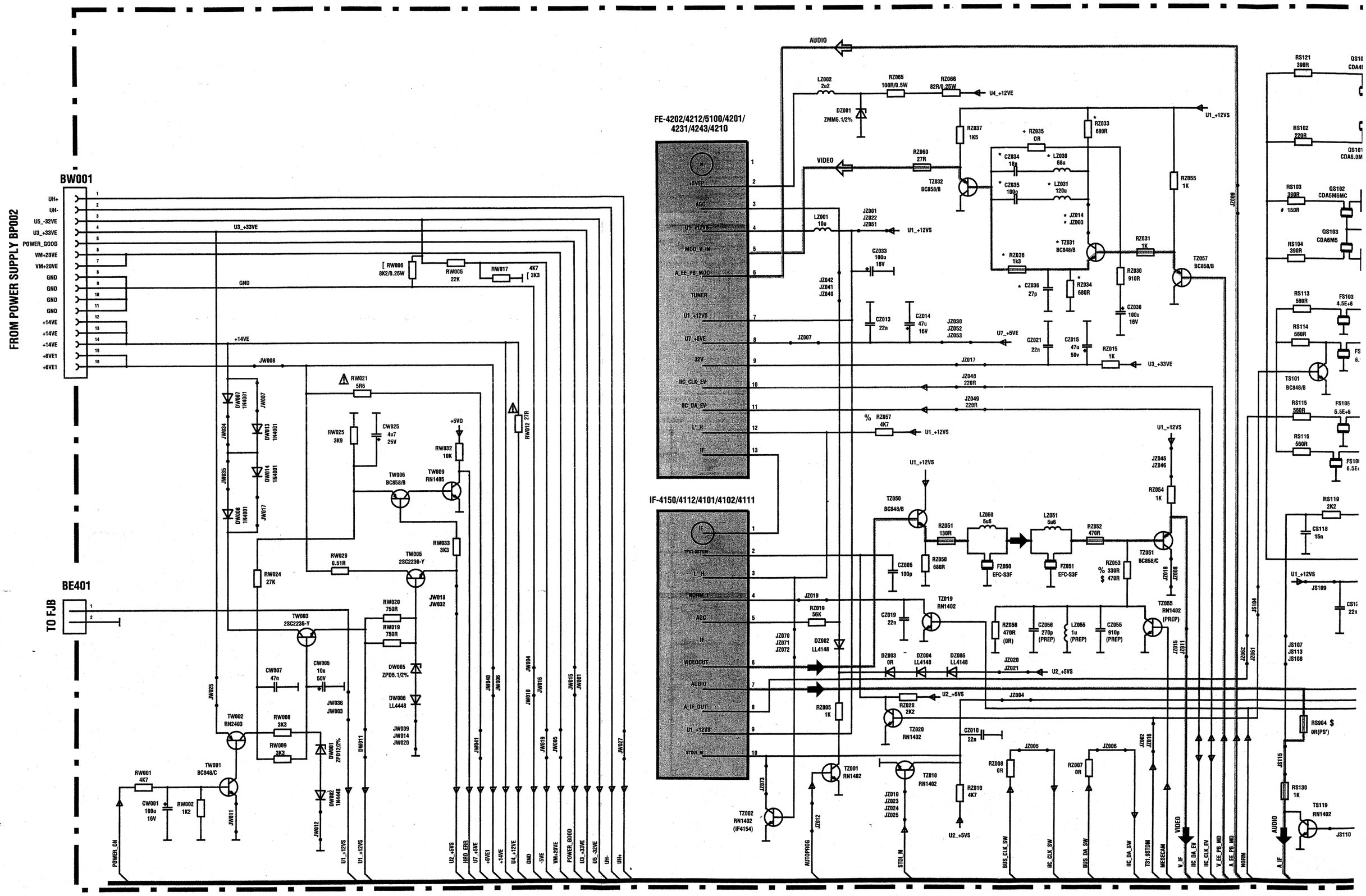

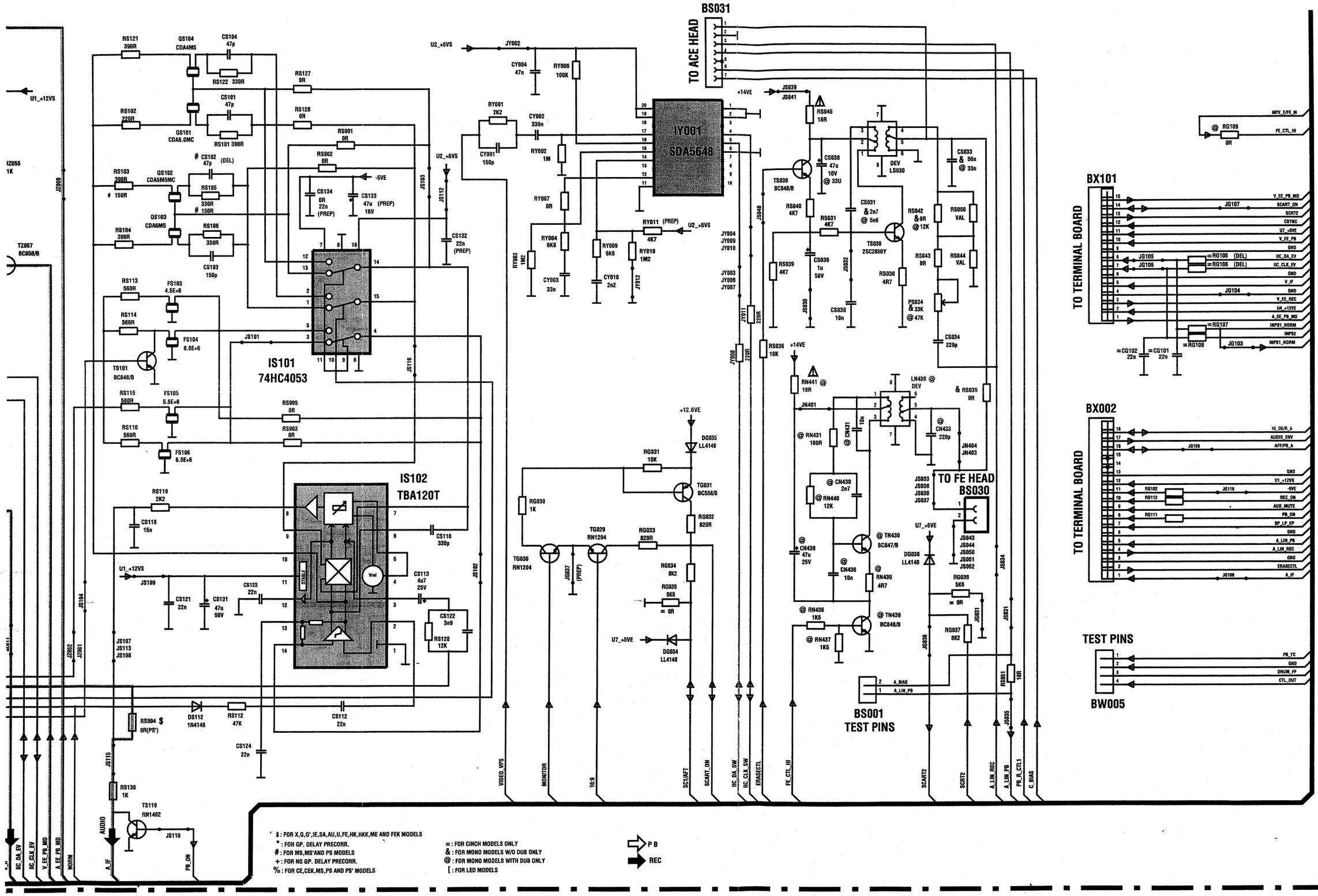

$: FOR X,G,G',IE,SA,AU,U,FE,HK,HKK,ME AND FEK MODELS
* : FOR GP. DELAY PRECORR.
# : FOR MS,MS'AND PS MODELS
+ : FOR NO GP. DELAY PRECORR.
% : FOR CE,CEK,MS,PS AND PS' MODELS

= : FOR CINCH MODELS ONLY
& : FOR MONO MODELS W/O DUB ONLY
@ : FOR MONO MODELS WITH DUB ONLY
[: FOR LED MODELS

POWER SUPPLY - ALIMENTATION - NETZTEIL - ALIMENTAZIONE - ALIMENTACIÓN

SCHEMATIC DIAGRAM - SCHEMA DE PRINCIPE - SCHALTBILD - SCHEMA - ESQUEMA (VP 2601 - VP 2651 - VP 4601 - VP 4681 -V 1250 SVM - V 1450 SVM - VR 7027 - T 8000 - M 9523 - M 9625 - M 9655)

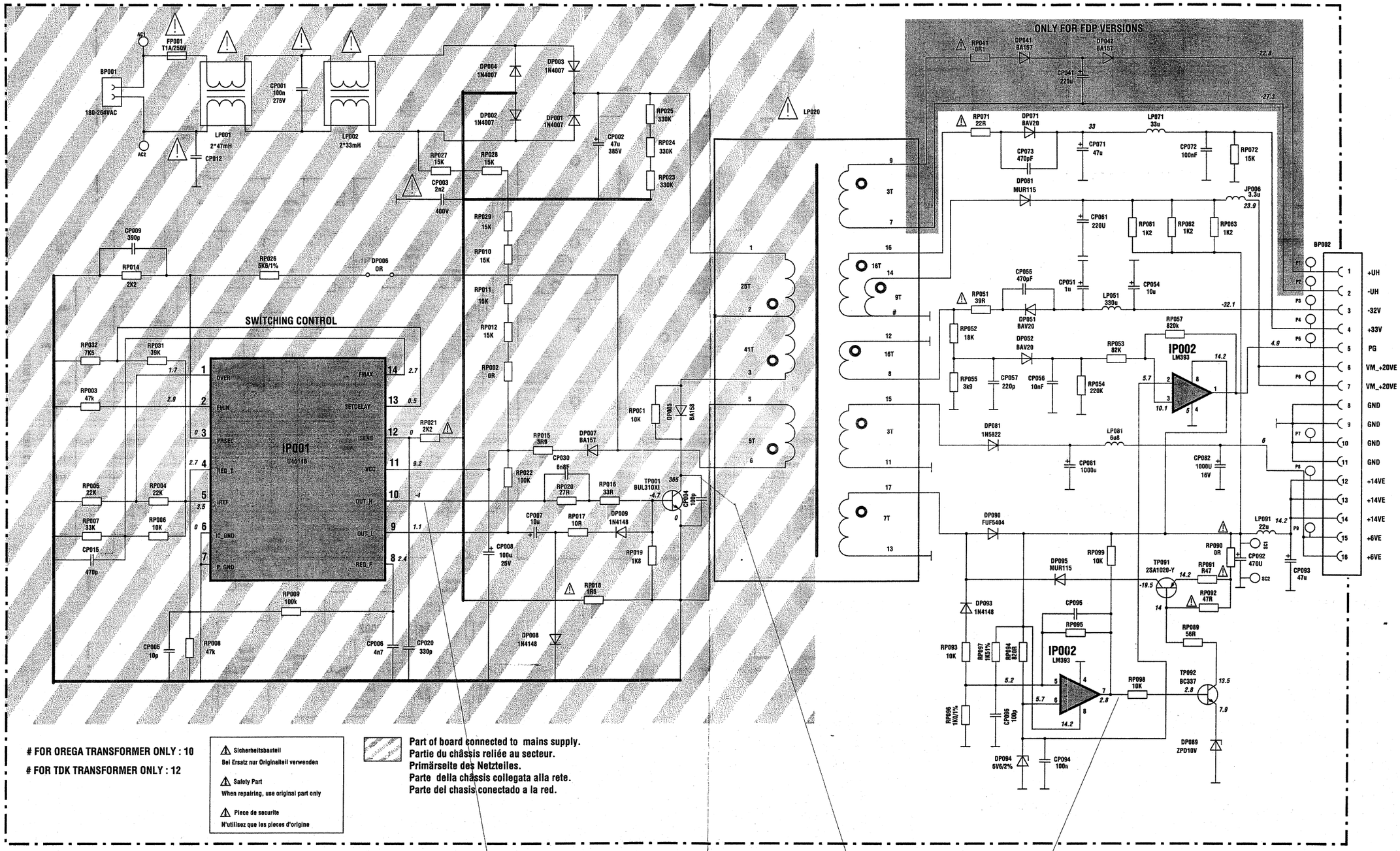

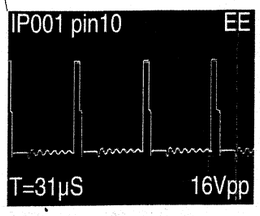

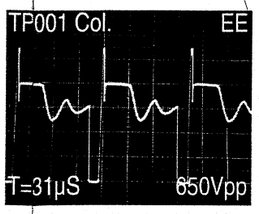

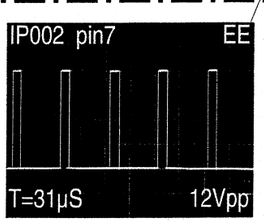

POWER SUPPLY - ALIMENTATION - NETZTEIL - ALIMENTAZIONE - ALIMENTACIÓN

SCHEMATIC DIAGRAM - SCHEMA DE PRINCIPE - SCHALTBILD - SCHEMA - ESQUEMA (VR 7021 - VR 7041)

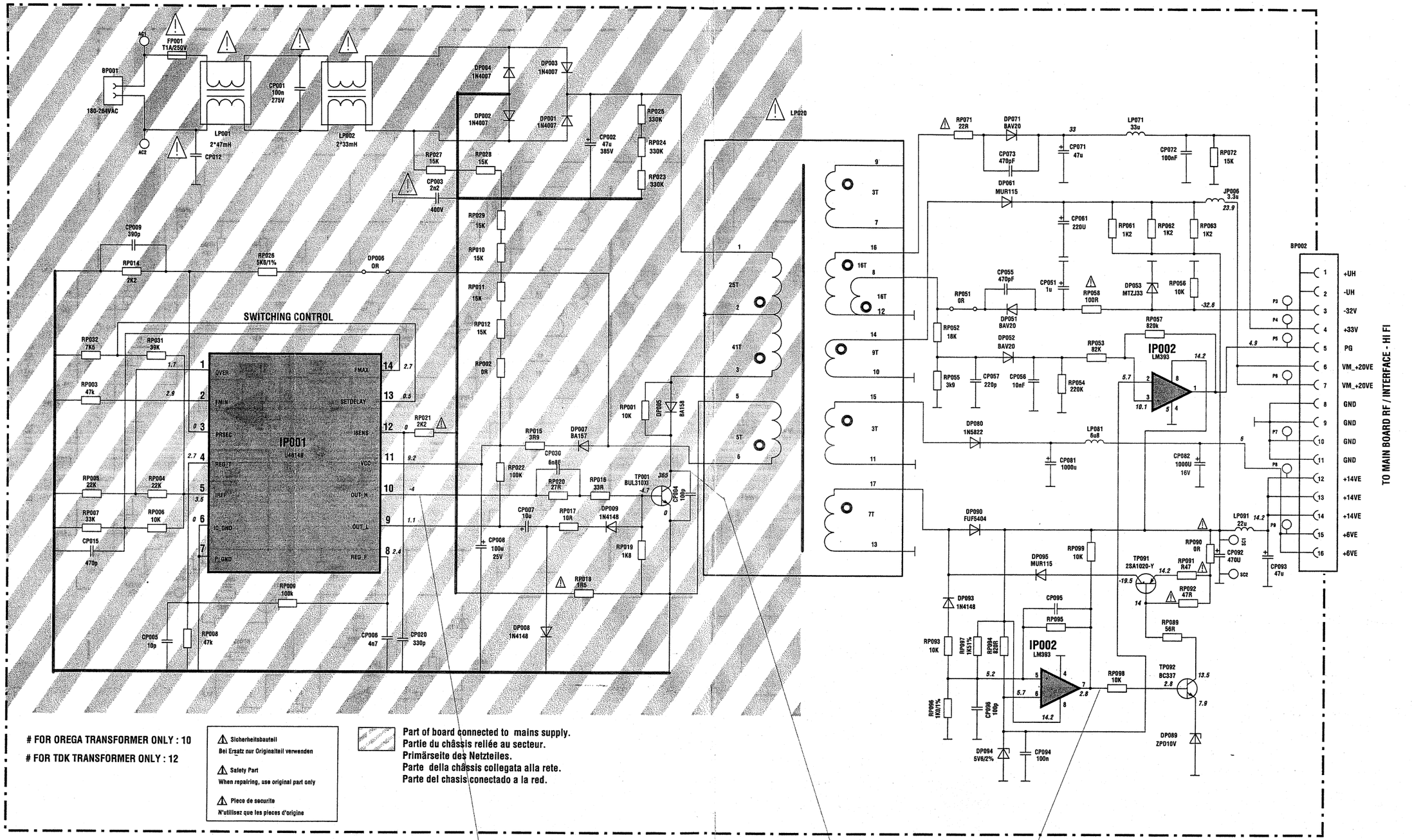

FOR OREGA TRANSFORMER ONLY : 10

FOR TDK TRANSFORMER ONLY : 12

⚠ Sicherheitsbauteil
Bei Ersatz nur Originalteil verwenden

⚠ Safety Part
When repairing, use original part only

⚠ Piece de securite
N'utilisez que les pieces d'origine

Part of board connected to mains supply.
Partie du châssis reliée au secteur.
Primärseite des Netzteiles.
Parte della chassis collegata alla rete.
Parte del chasis conectado a la red.

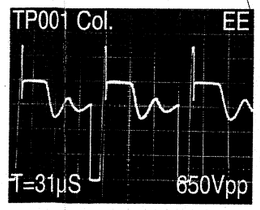

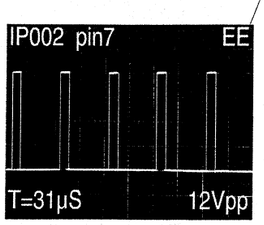

POWER SUPPLY BOARD - PLATINE ALIMENTATION - NETZTEIL LEITERPLATTE - PIASTRA ALIMENTAZIONE - PLATINA ALIMENTACIÓN

Component side -Côté composants - Bestückungsseite - Lato componenti - Lado componentes

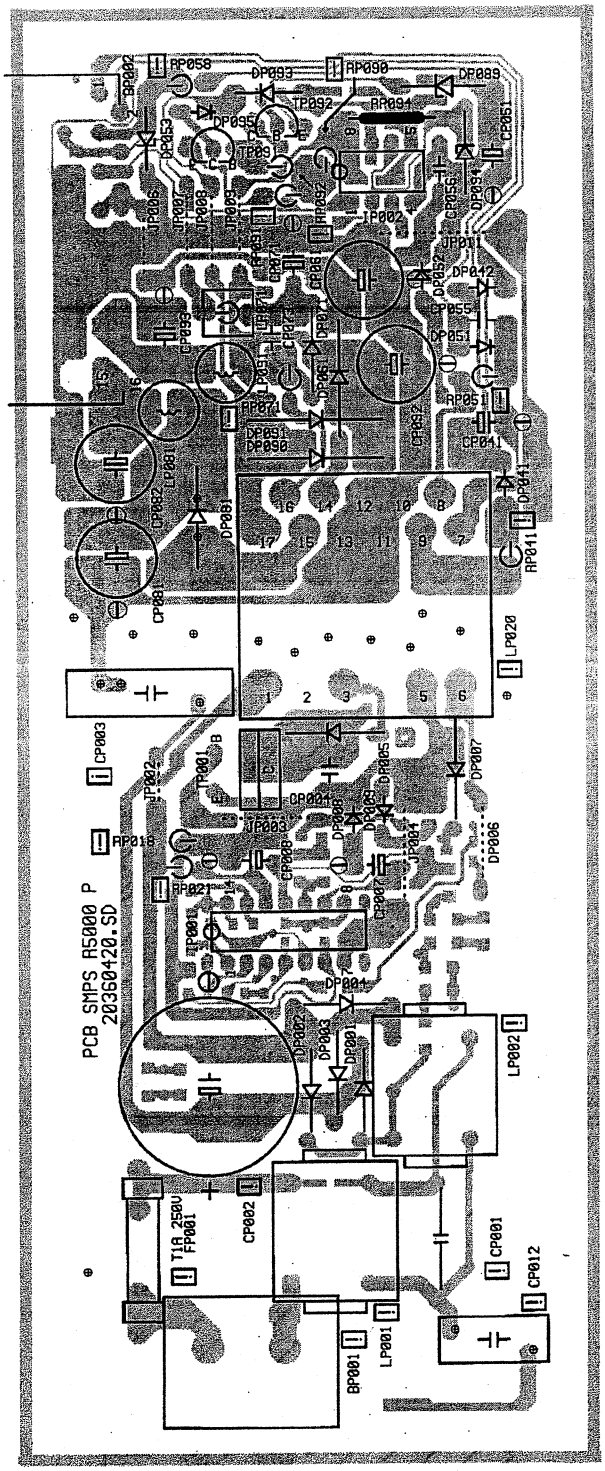

Solder side -Côté cuivre - Lötseite - Lato saldature - Lado del cobre

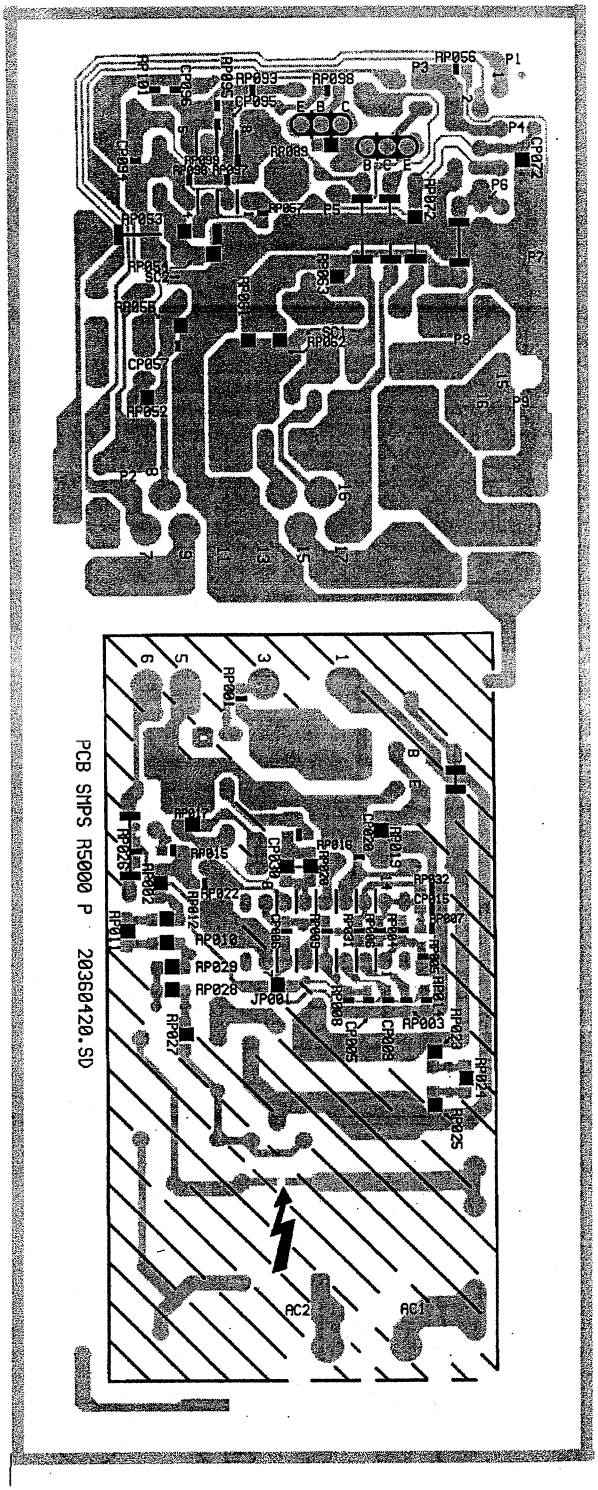

POWER SUPPLY BOARD - PLATINE ALIMENTATION - NETZTEIL LEITERPLATTE - PIASTRA ALIMENTAZIONE - PLATINA ALIMENTACIÓN (V 1455 SENSAR)

Component side -Côté composants - Bestückungsseite - Lato componenti - Lado componentes

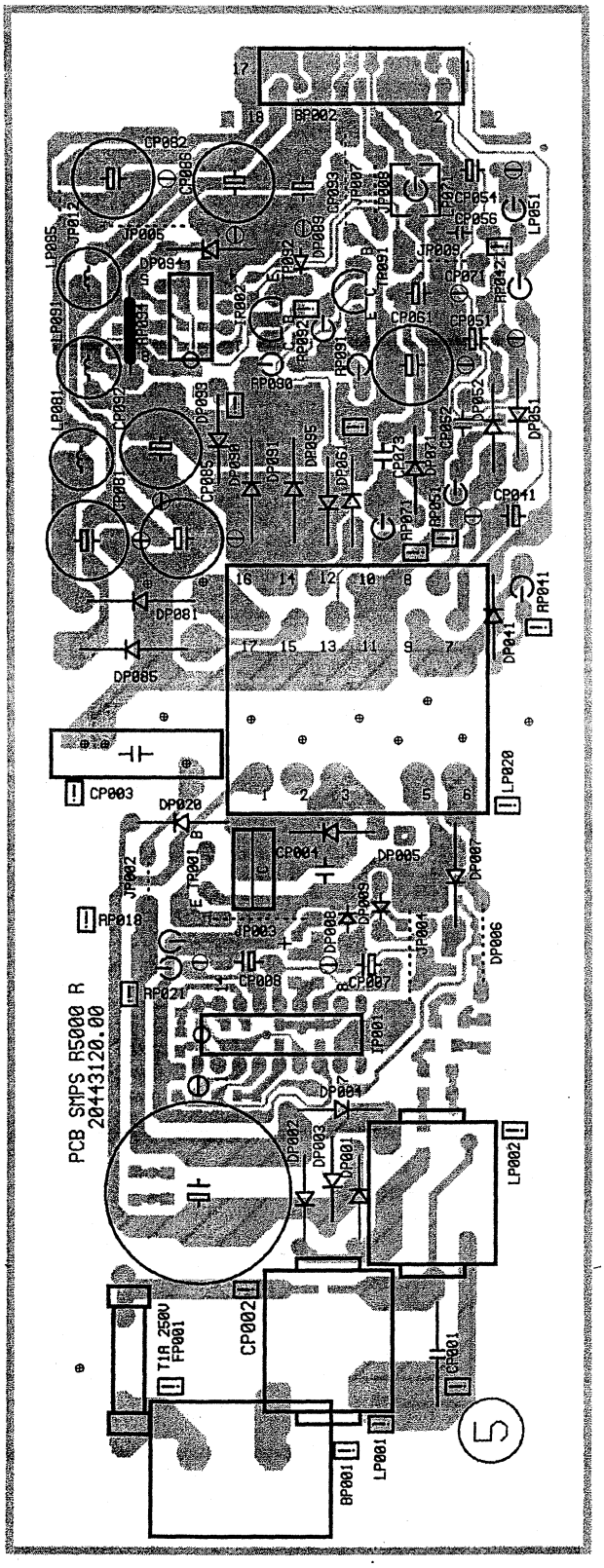

Solder side -Côté cuivre - Lötseite - Lato saldature - Lado del cobre

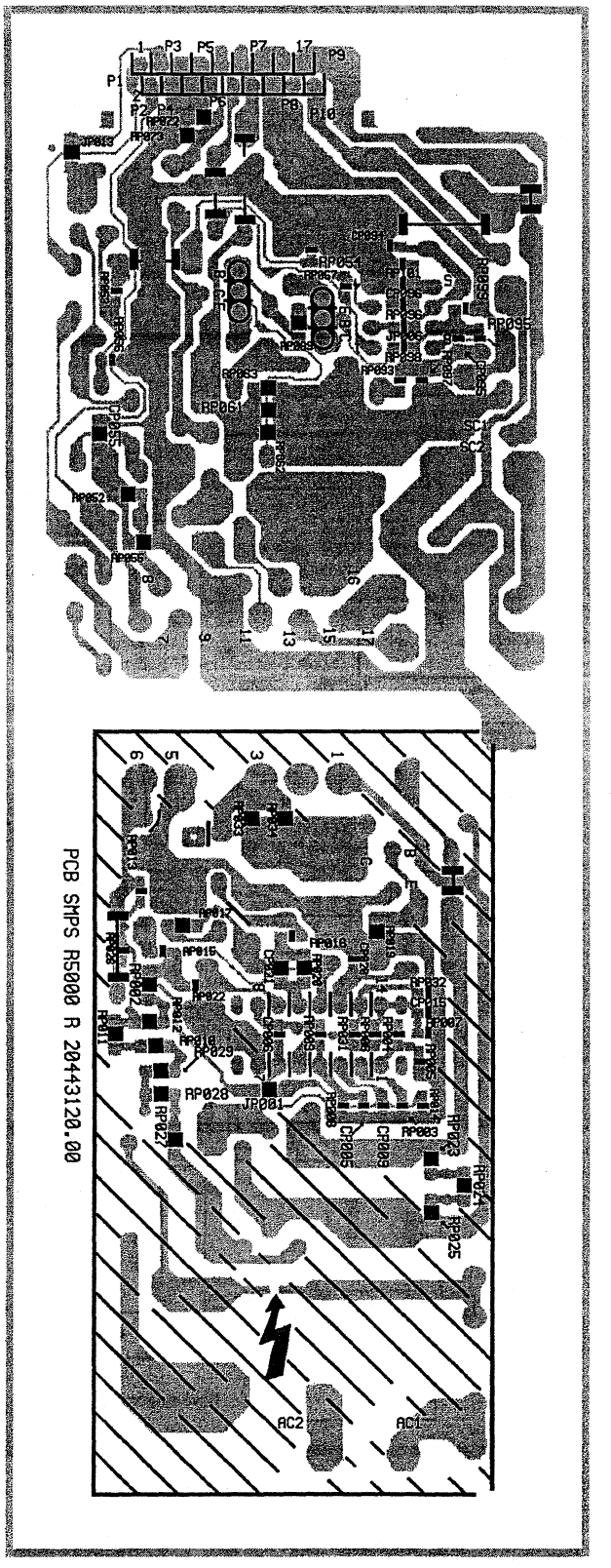

POWER SUPPLY - ALIMENTATION - NETZTEIL - ALIMENTAZIONE - ALIMENTACIÓN

SCHEMATIC DIAGRAM - SCHEMA DE PRINCIPE - SCHALTBILD - SCHEMA - ESQUEMA (V 1455 SENSAR)

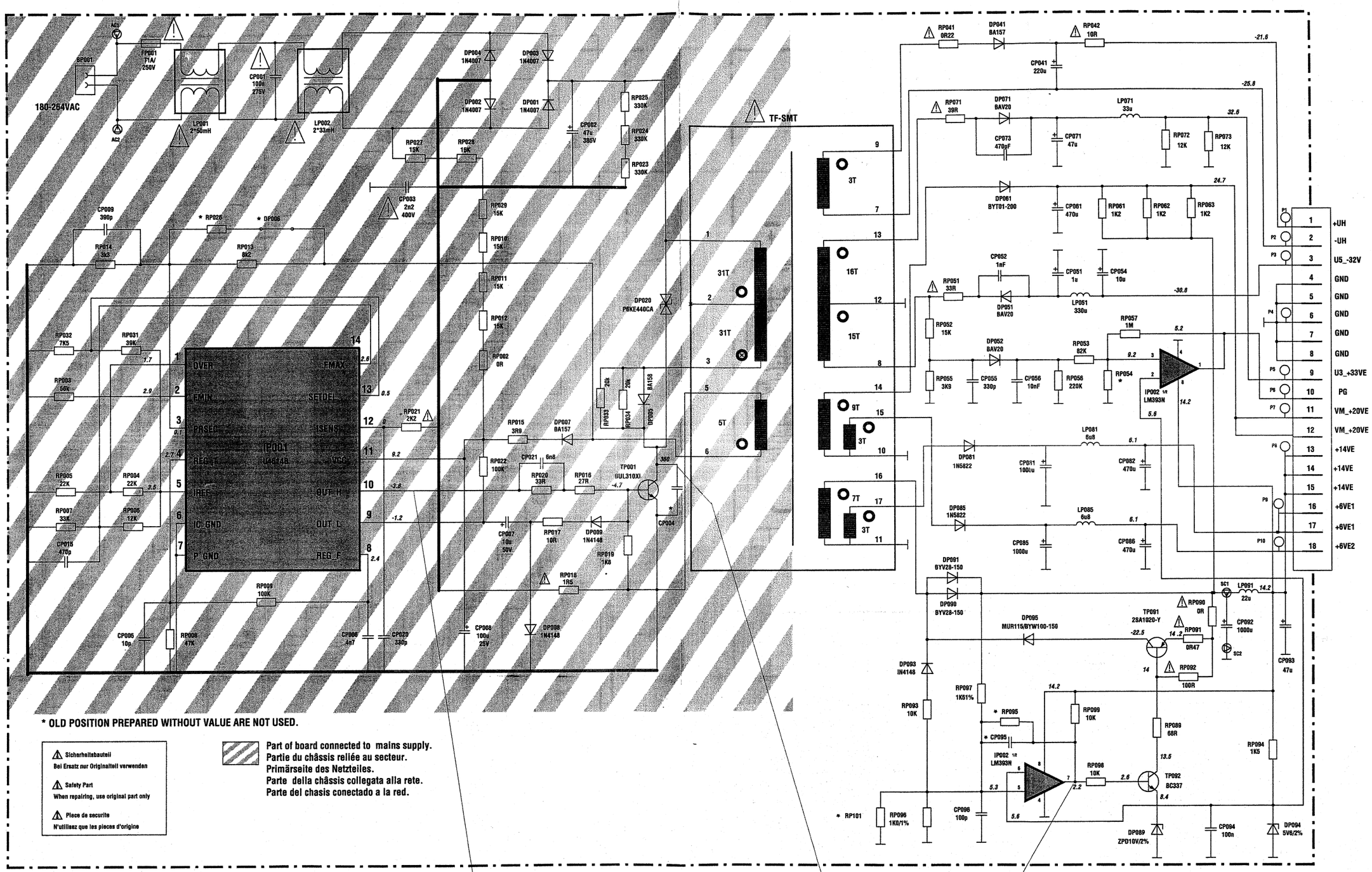

* OLD POSITION PREPARED WITHOUT VALUE ARE NOT USED.

⚠ Sicherheitsbauteil
Bei Ersatz nur Originalteil verwenden

⚠ Safety Part
When repairing, use original part only

⚠ Piece de securite
N'utilisez que les pieces d'origine

Part of board connected to mains supply.
Partie du châssis reliée au secteur.
Primärseite des Netzteiles.
Parte della châssis collegata alla rete.
Parte del chasis conectado a la red.

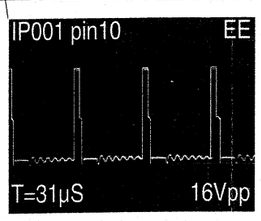

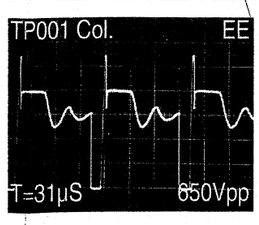

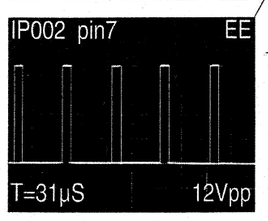

GRAPHIC BOARD (ICONS) - PLATINE GRAPHIQUE (ICONES) - LEITERPLATTE ZEICHENSATZEINBLENDUNG

BLOCK DIAGRAM - SCHEMA SYNOPTIQUE - BLOCKSCHALTBILD -
SCHEMA A BLOCCHI - ESQUEMA DE BLOQUES

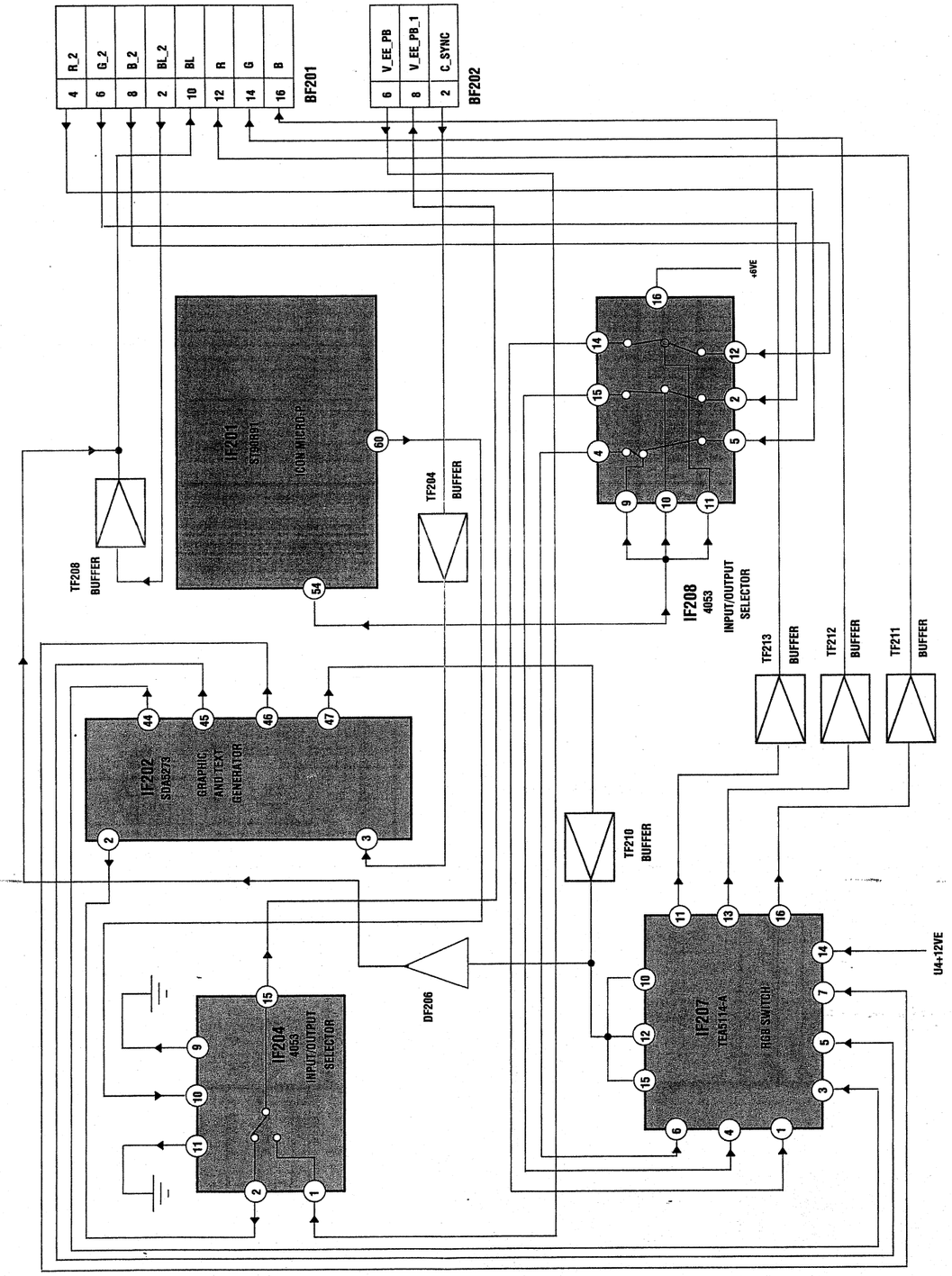

Component side -Côté composants - Bestückungsseite - Lato componenti - Lado componentes

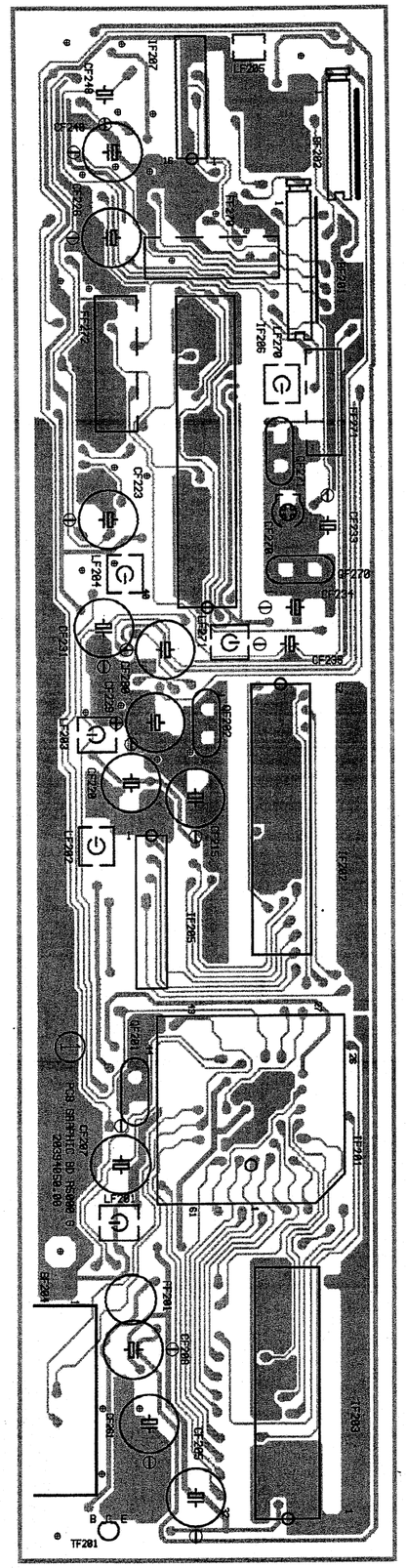

Solder side -Côté cuivre - Lötseite - Lato saldature - Lado del cobre

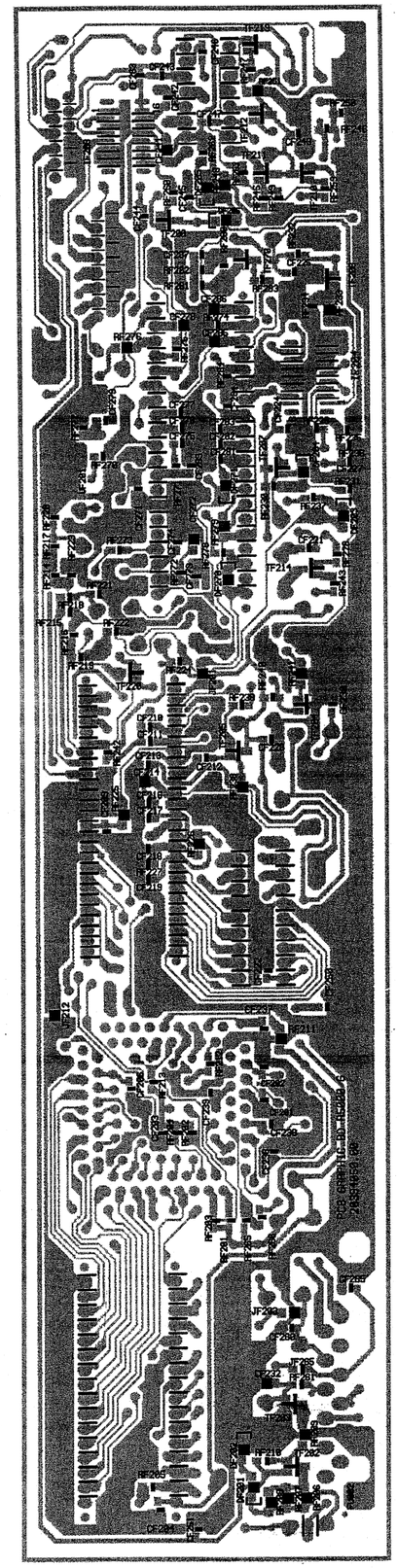

GRAPHIC BOARD (ICONS) - PLATINE GRAPHIQUE (ICONES) - LEITERPLATTE ZEICHENSATZEINBLENDUNG

SCHEMATIC DIAGRAM - SCHEMA DE PRINCIPE - SCHALTBILD - SCHEMA - ESQUEMA

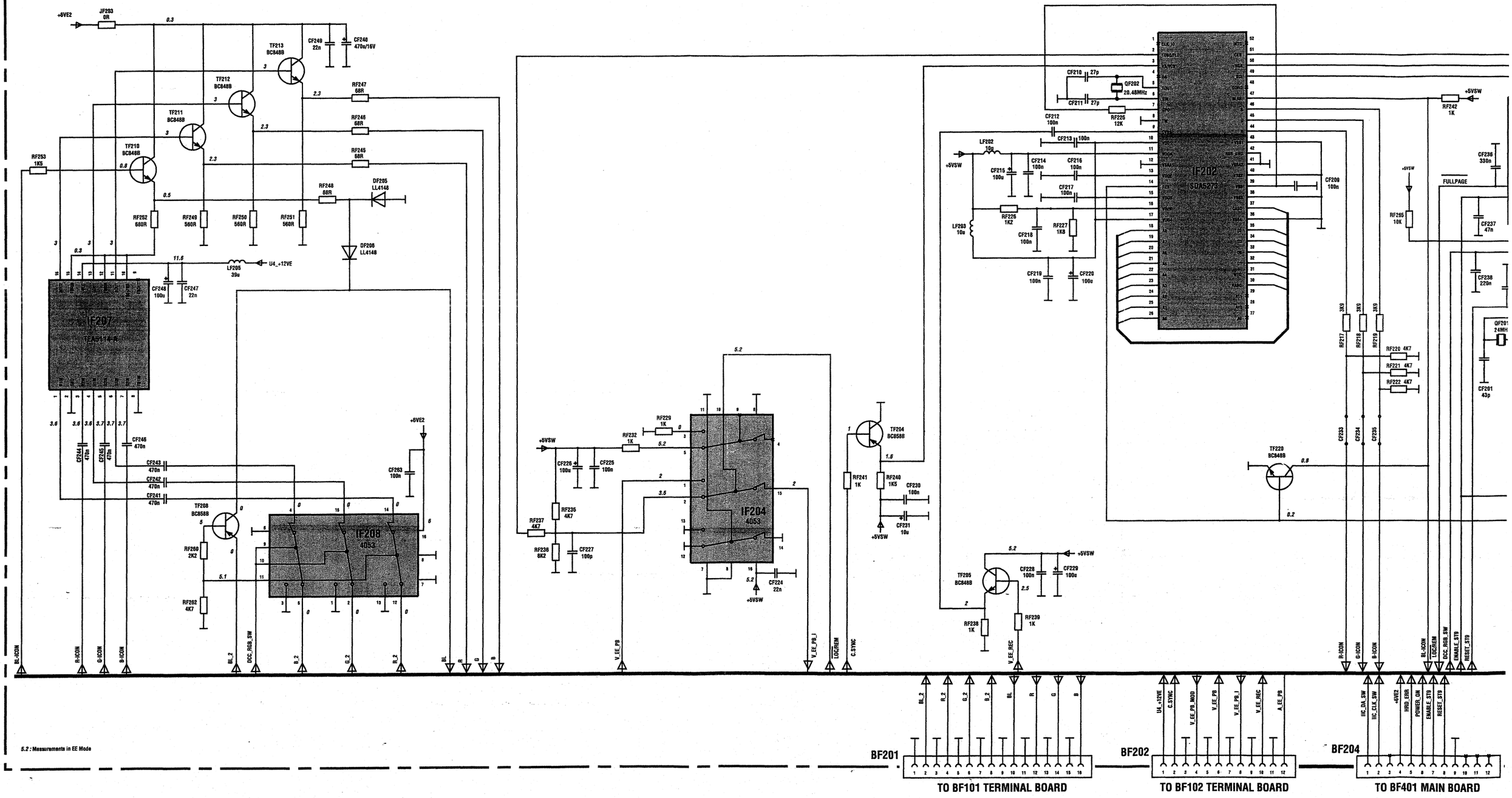

5.2 : Measurements in EE Mode

IF 4101 / 4101A

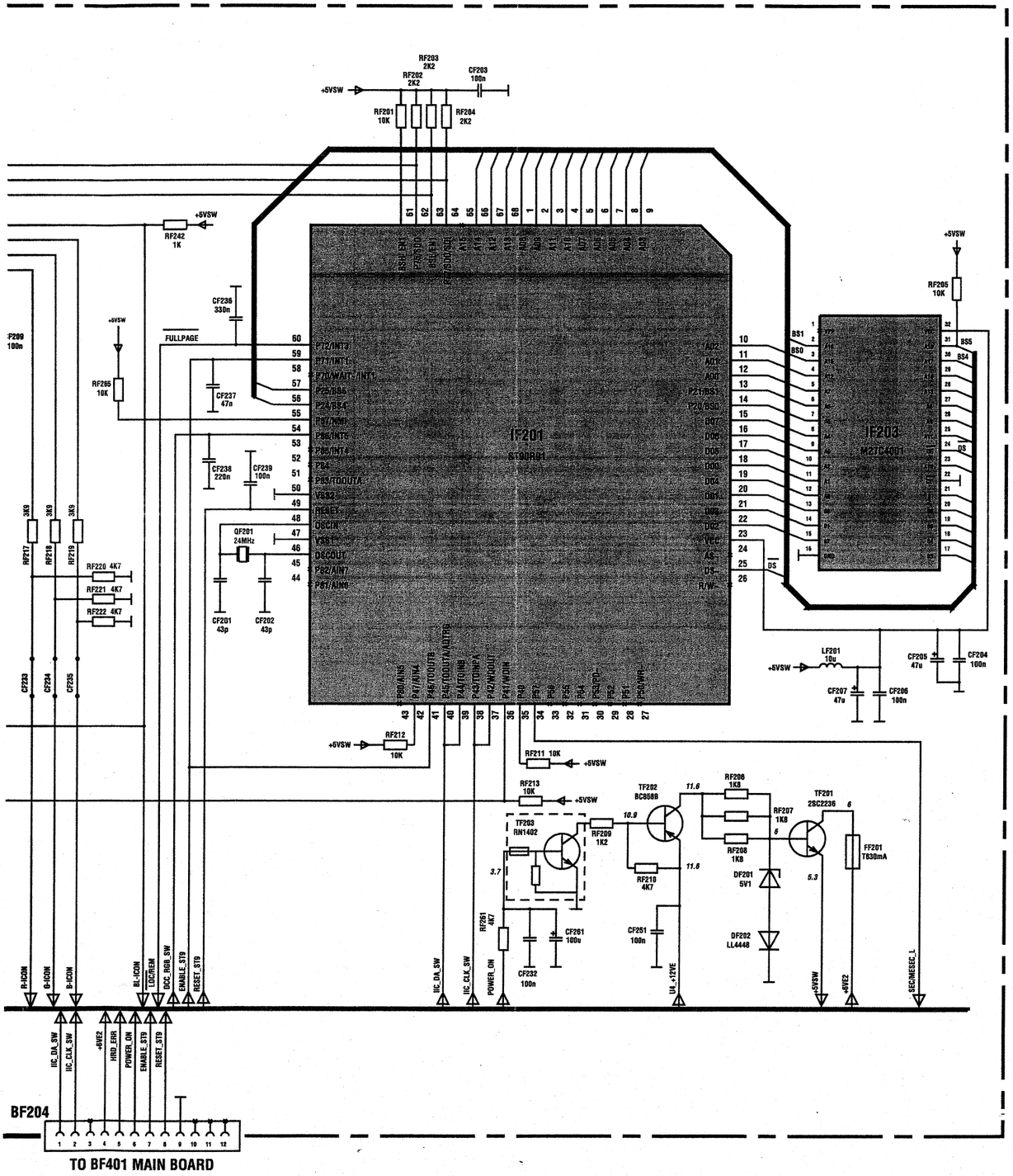

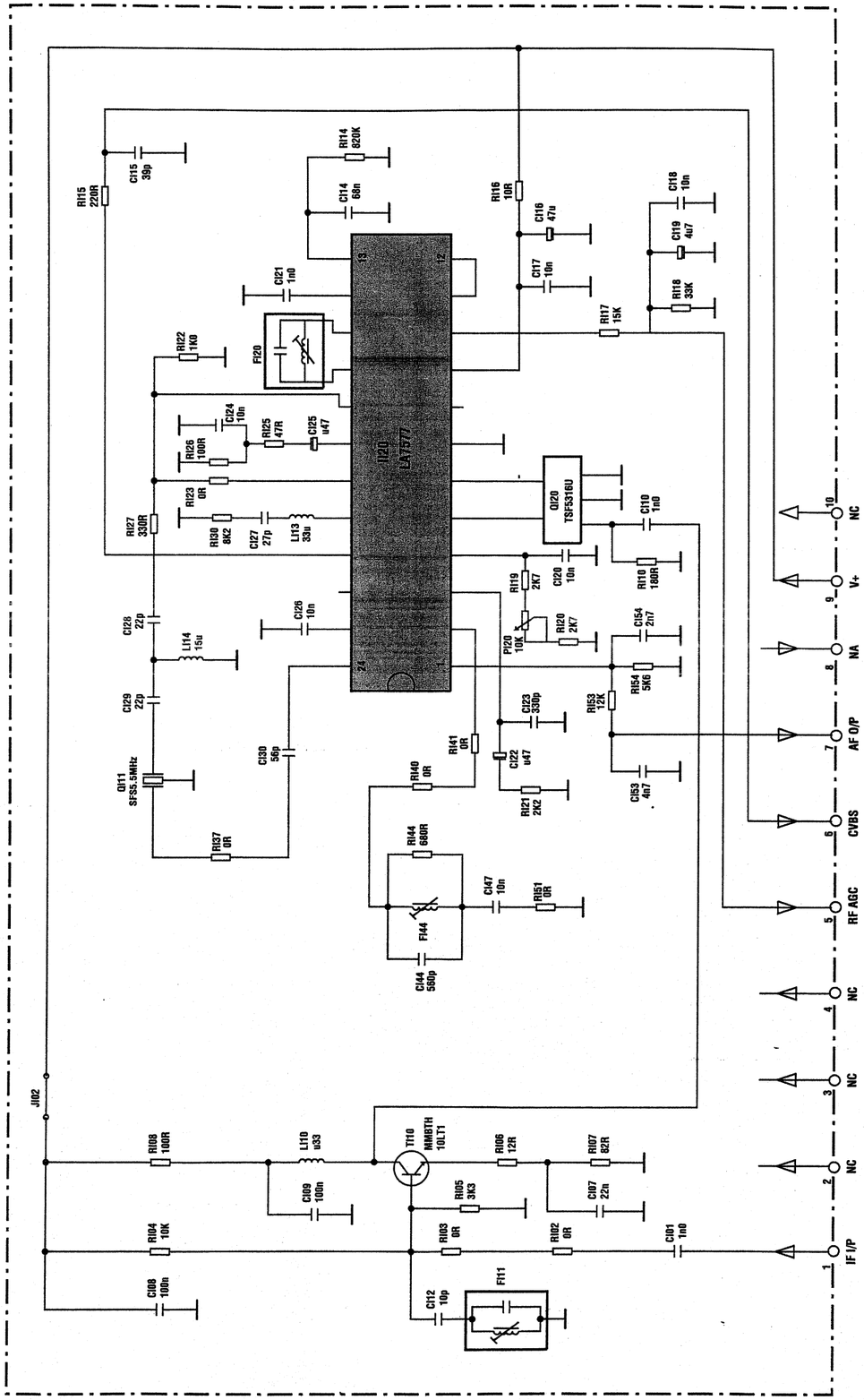

Updated 01 / 97

IF 4112

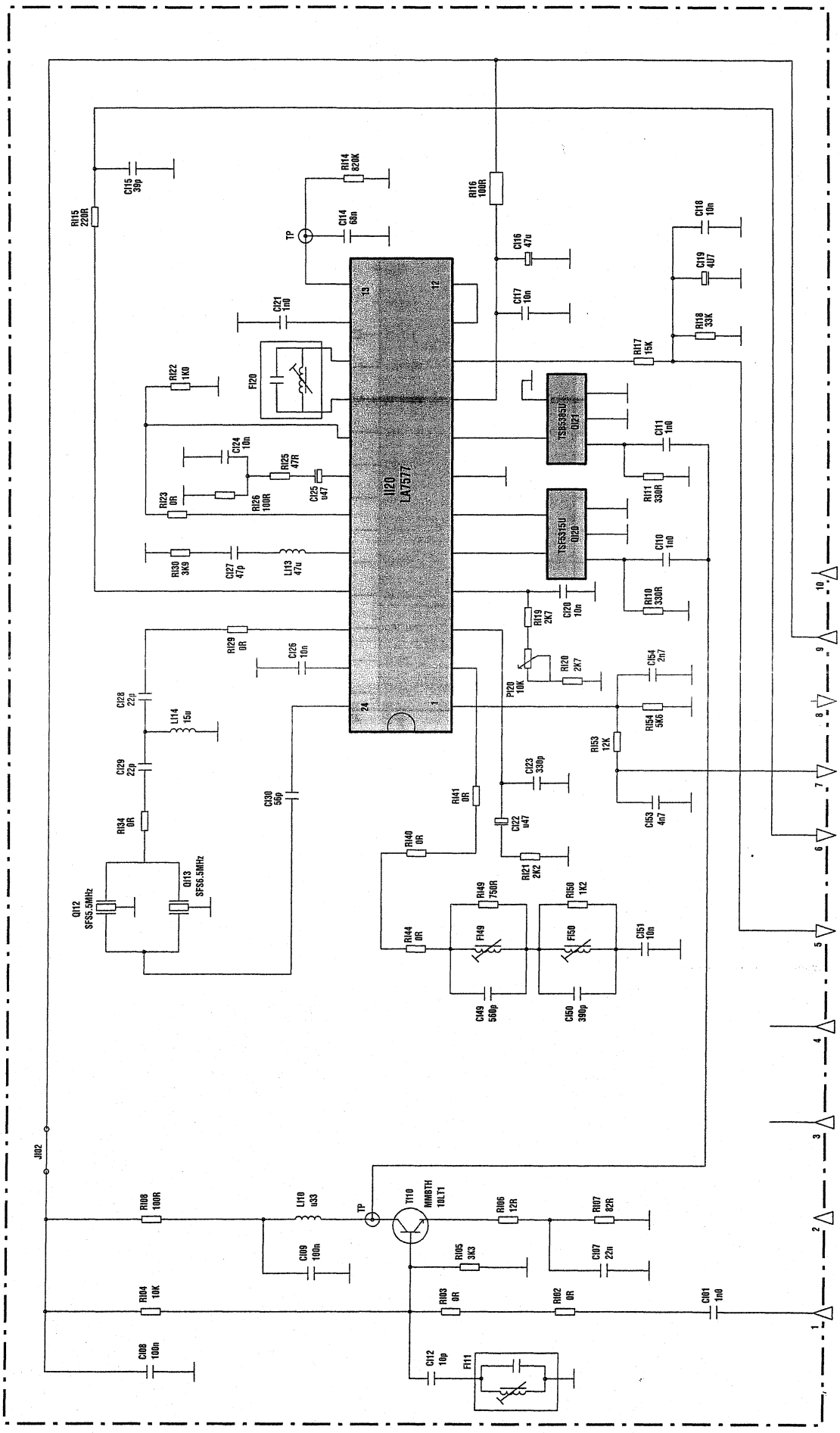

IF I/P
NC
NC
NC
NC
NC
RF AGC
CVBS
AF O/P
V +
NC
IL20
LA7577
TSF5315U
Q120
TSB5385U
Q121
Q112
SFS5.5MHz
Q113
SFS6.5MHz
TP

IF 4153 M

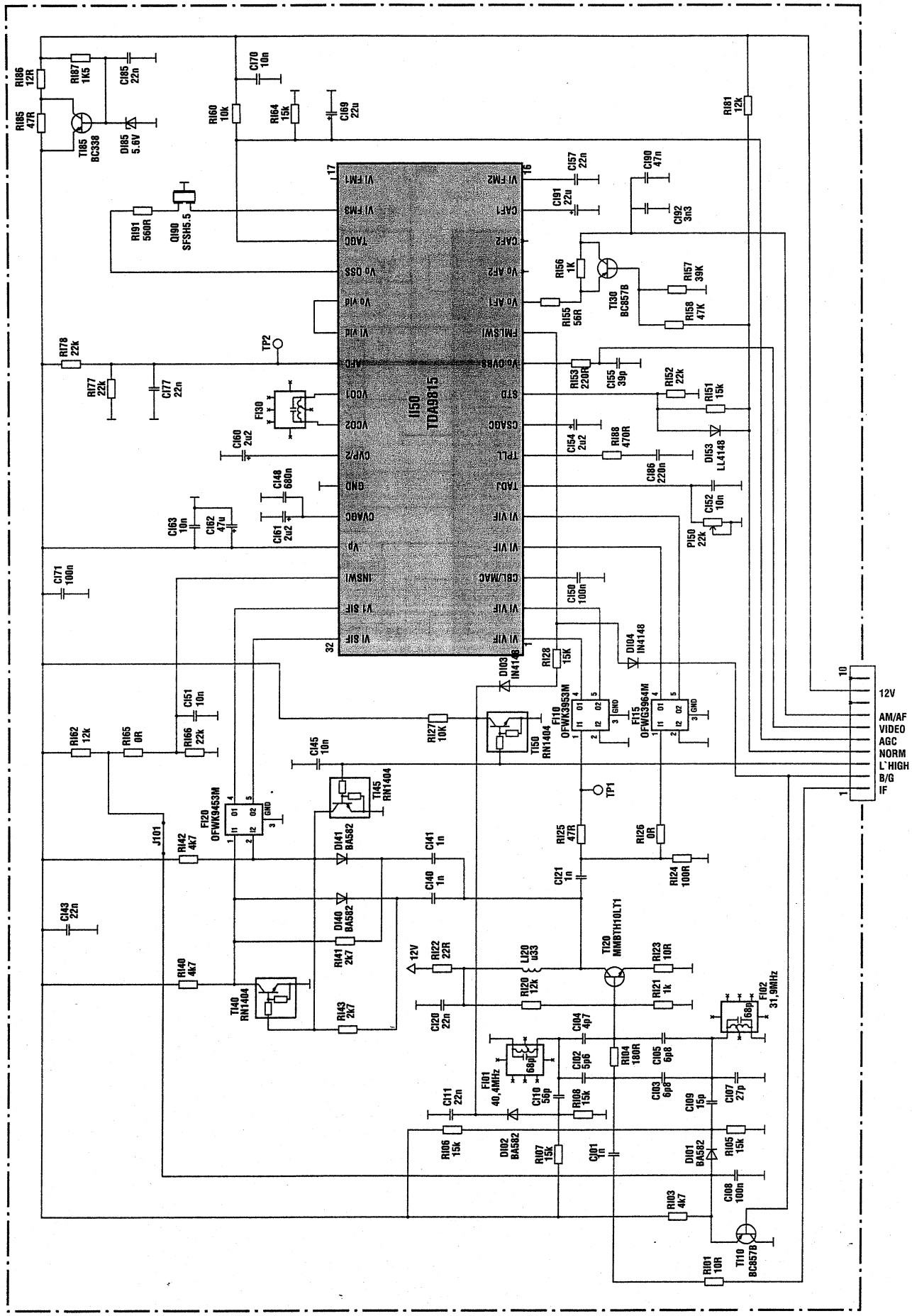

SECAM SUB BOARD - PLATINE SECAM - SUB MODUL SECAM - PIASTRA SECAM - PLATINA SECAM

SCHEMATIC DIAGRAM - SCHEMA DE PRINCIPE - SCHALTBILD - SCHEMA - ESQUEMA

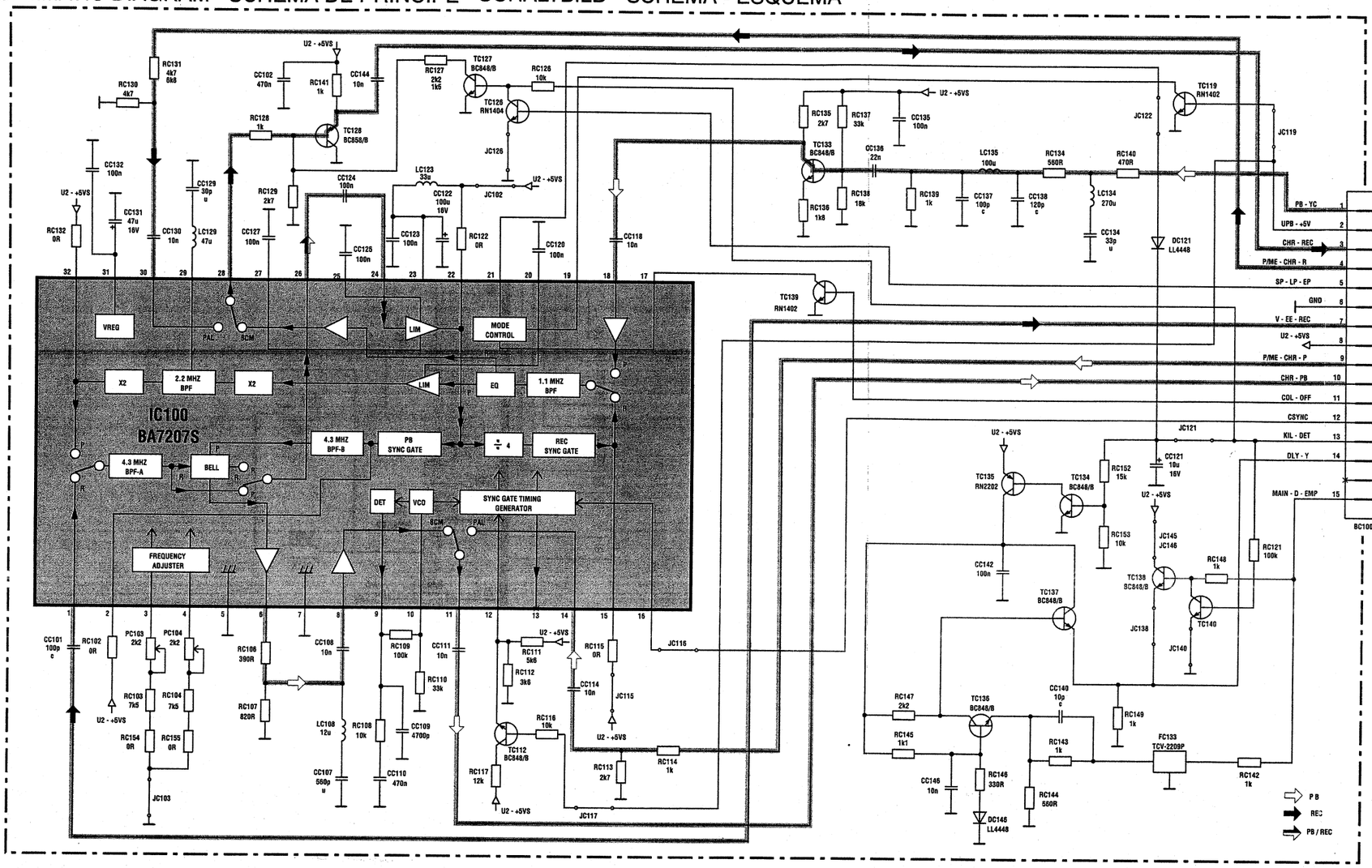

(Voir pages 37,41 ou 45)

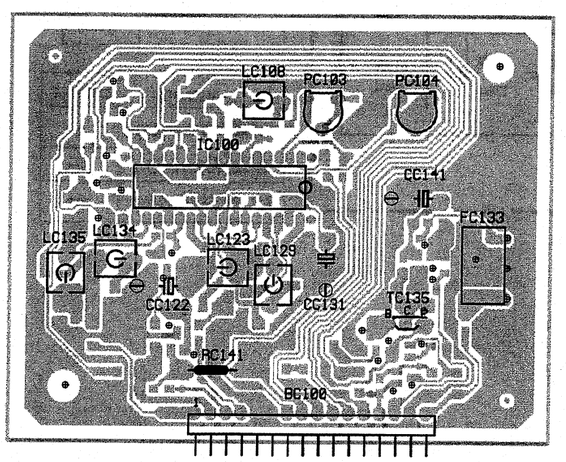

Component side -Côté composants - Bestückungsseite - Lato componenti - Lado componentes

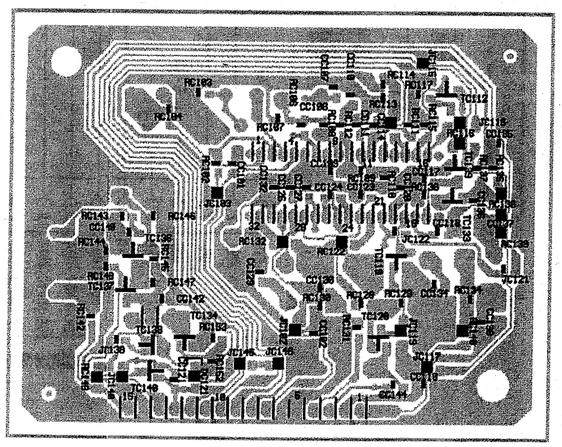

Solder side -Côté cuivre - Lötseite - Lato saldature - Lado del cobre

BC100 pin1 SECAM PB
1
V 0,2Vpp

BC100 pin3 PAL REC
2
H 0,15Vpp

BC100 pin4 PAL REC
3
H 4,2Vpp

BC100 pin7 SECAM REC
4
H 1Vpp

BC100 pin9 PAL PB
5
V 0,45Vpp

BC100 pin10 SECAM PB
6
V 0.25Vpp

BC100 pin12 REC/PB
7
H 4Vpp

BC100 pin10 PAL PB
6
V 0.3Vpp

KEYBOARD WITH DISPLAY - PLATINE DE COMMANDES AVEC AFFICHEUR - BEDIENTEIL MIT DISPLAY - TASTIERA CON DISPLAY - PLATINA MANDOS CON VISUALIZADOR

SCHEMATIC DIAGRAM - SCHEMA DE PRINCIPE - SCHALTBILD - SCHEMA - ESQUEMA (VP 2601)

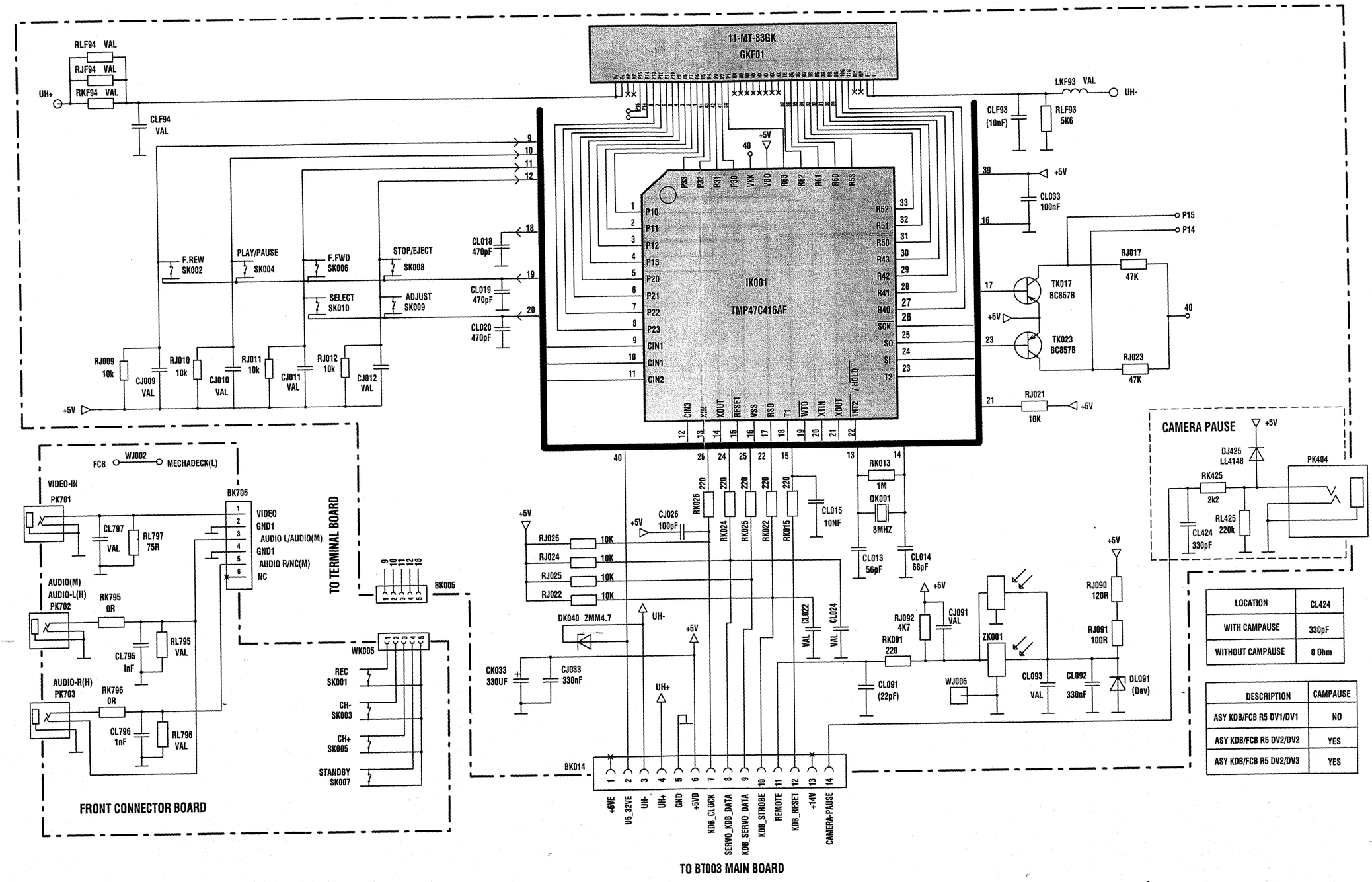

LOCATION	CL424
WITH CAMPAUSE	330pF
WITHOUT CAMPAUSE	0 Ohm

DESCRIPTION	CAMPAUSE
ASY KDB/FCB R5 DV1/DV1	NO
ASY KDB/FCB R5 DV2/DV2	YES
ASY KDB/FCB R5 DV2/DV3	YES

KEYBOARD WITH DISPLAY - PLATINE DE COMMANDES AVEC AFFICHEUR - BEDIENTEIL MIT DISPLAY - TASTIERA CON DISPLAY - PLATINA MANDOS CON VISUALIZADOR (VP 2601)

Component side -Côté composants - Bestückungsseite - Lato componenti - Lado componentes

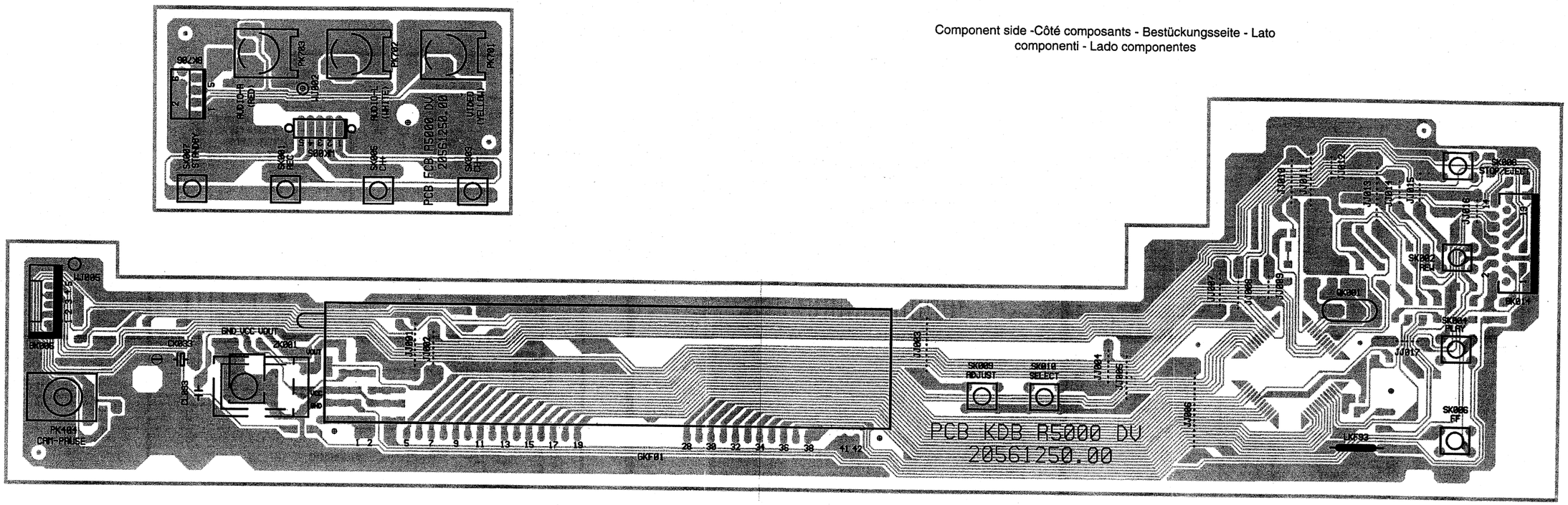

Solder side -Côté cuivre - Lötseite - Lato saldature - Lado del cobre

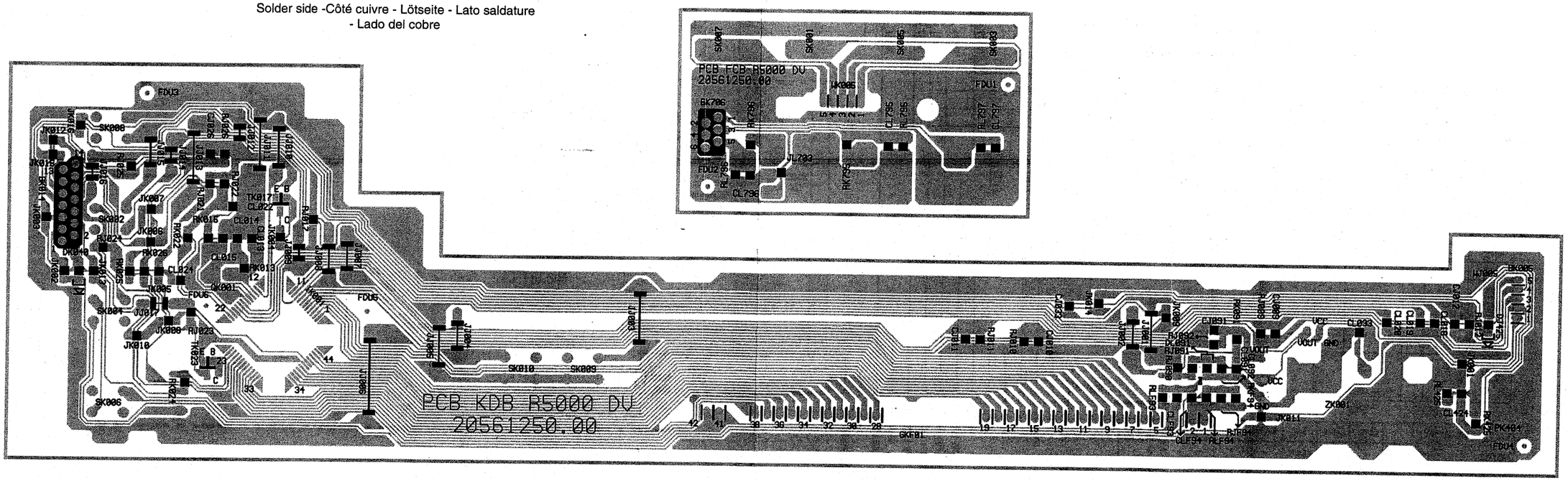

KEYBOARD WITH DISPLAY - PLATINE DE COMMANDES AVEC AFFICHEUR - BEDIENTEIL MIT DISPLAY - TASTIERA CON DISPLAY - PLATINA MANDOS CON VISUALIZADOR

SCHEMATIC DIAGRAM - SCHEMA DE PRINCIPE - SCHALTBILD - SCHEMA - ESQUEMA (VP 2651 / VP 4681)

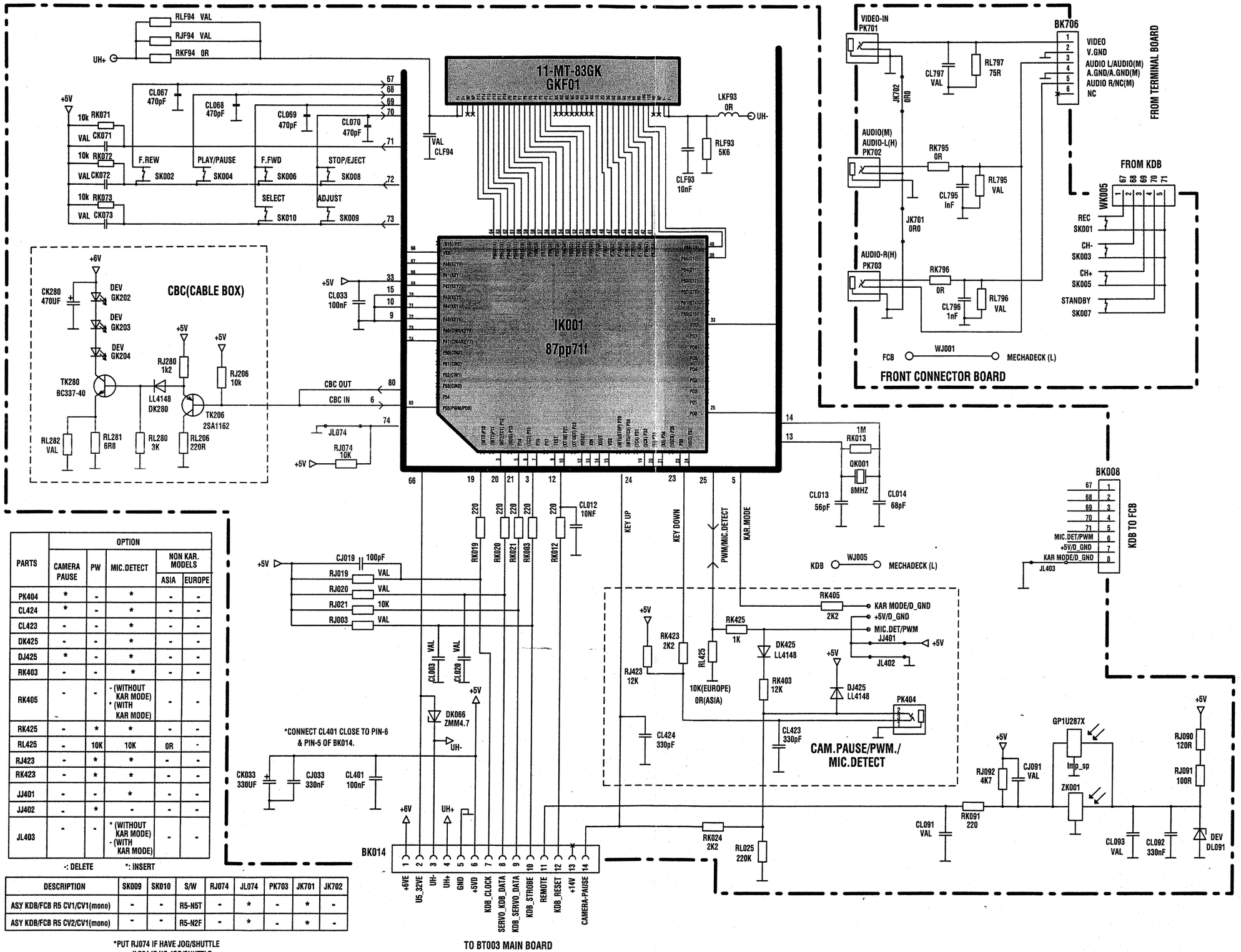

PARTS	OPTION				
	CAMERA PAUSE	PW	MIC.DETECT	NON KAR. MODELS ASIA	NON KAR. MODELS EUROPE
PK404	*	-	*	-	-
CL424	*	-	*	-	-
CL423	-	-	*	-	-
DK425	-	-	*	-	-
DJ425	*	-	*	-	-
RK403	-	-	*	-	-
RK405	-	-	- (WITHOUT KAR MODE) * (WITH KAR MODE)	-	-
RK425	-	*	*	-	-
RL425	-	10K	10K	0R	-
RJ423	-	*	*	-	-
RK423	-	*	*	-	-
JJ401	-	-	*	-	-
JJ402	-	*	-	-	-
JL403	-	-	* (WITHOUT KAR MODE) - (WITH KAR MODE)	-	-

-: DELETE *: INSERT

DESCRIPTION	SK009	SK010	S/W	RJ074	JL074	PK703	JK701	JK702
ASY KDB/FCB R5 CV1/CV1(mono)	-	-	R5-N5T	-	*	-	*	-
ASY KDB/FCB R5 CV2/CV1(mono)	-	-	R5-N2F	-	*	-	*	-

*PUT RJ074 IF HAVE JOG/SHUTTLE
JL704 IF NO JOG/SHUTTLE

KEYBOARD WITH DISPLAY - PLATINE DE COMMANDES AVEC AFFICHEUR - BEDIENTEIL MIT DISPLAY - TASTIERA CON DISPLAY - PLATINA MANDOS CON VISUALIZADOR (VP 2651 / VP 4681)

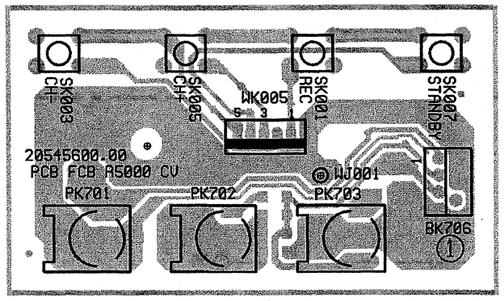

Component side -Côté composants - Bestückungsseite - Lato componenti - Lado componentes

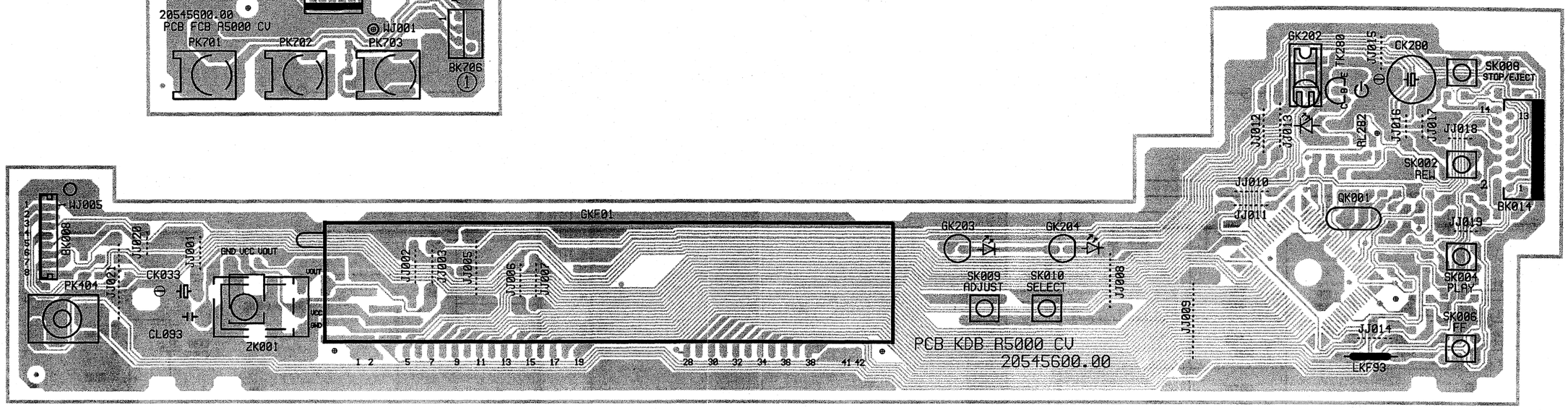

Solder side -Côté cuivre - Lötseite - Lato saldature - Lado del cobre

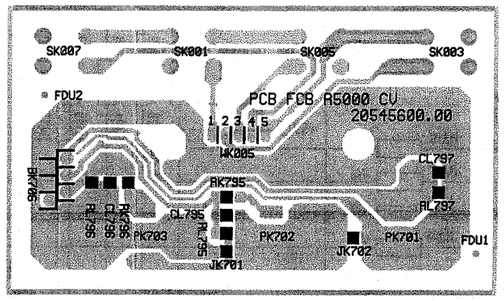

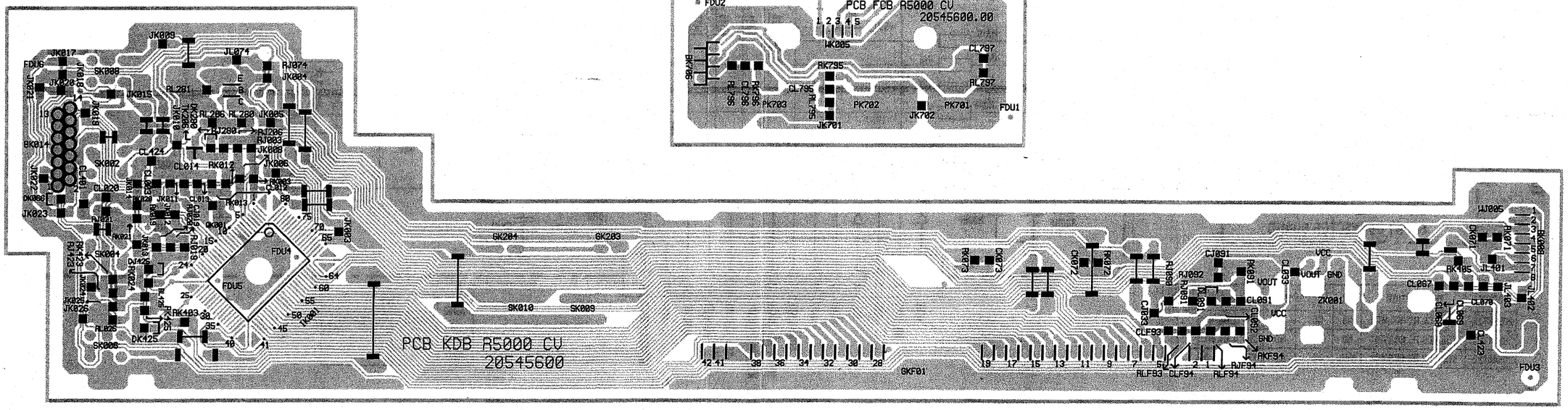

KEYBOARD WITH DISPLAY - PLATINE DE COMMANDES AVEC AFFICHEUR - BEDIENTEIL MIT DISPLAY - TASTIERA CON DISPLAY - PLATINA MANDOS CON VISUALIZADOR

SCHEMATIC DIAGRAM - SCHEMA DE PRINCIPE - SCHALTBILD - SCHEMA - ESQUEMA (VP 4601)

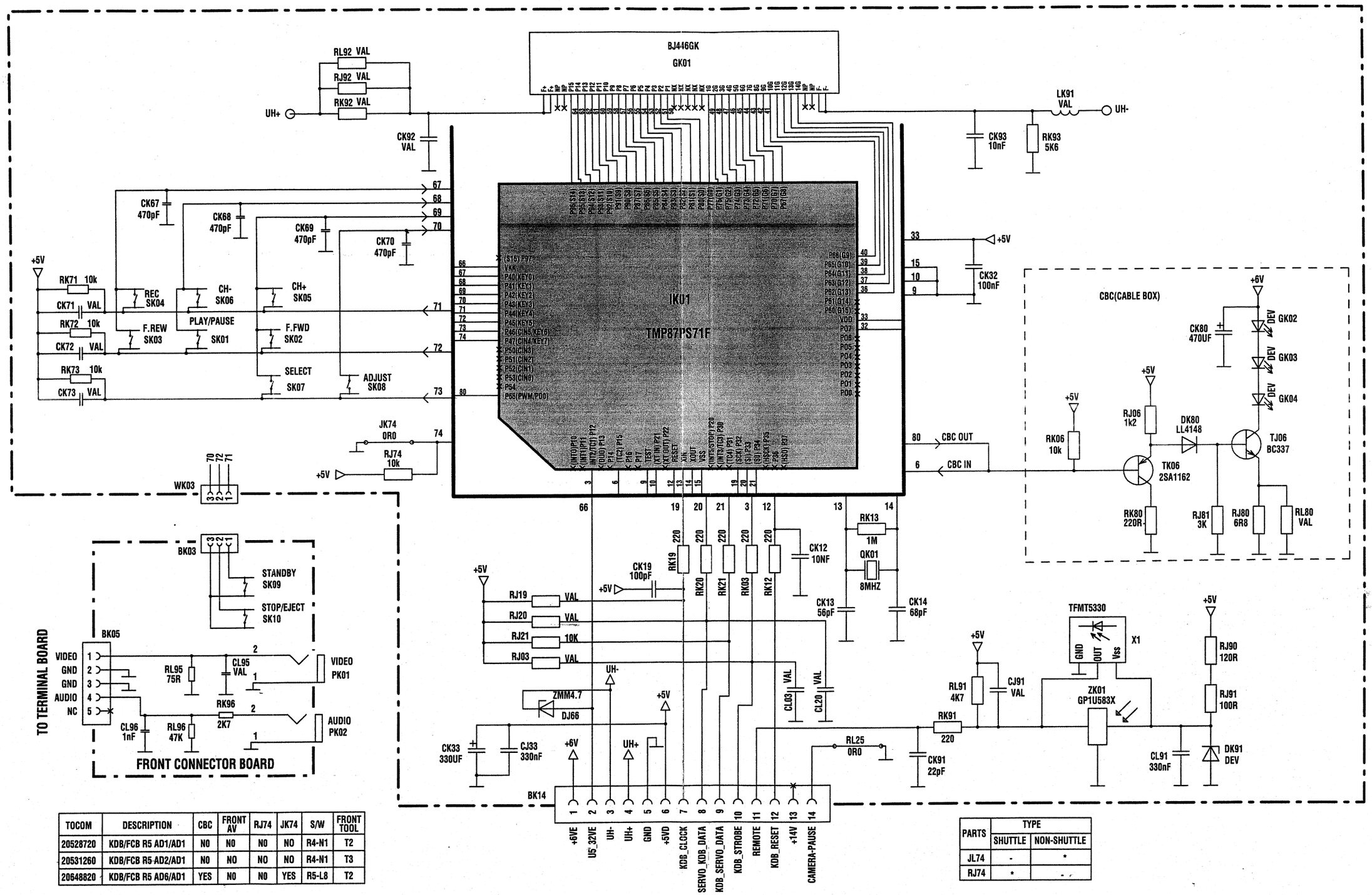

TOCOM	DESCRIPTION	CBC	FRONT AV	RJ74	JK74	S/W	FRONT TOOL
20528720	KDB/FCB R5 AD1/AD1	NO	NO	NO	NO	R4-N1	T2
20531260	KDB/FCB R5 AD2/AD1	NO	NO	NO	NO	R4-N1	T3
20648820	KDB/FCB R5 AD6/AD1	YES	NO	NO	YES	R5-L8	T2

PARTS	TYPE	
	SHUTTLE	NON-SHUTTLE
JL74	-	*
RJ74	*	-

KEYBOARD WITH DISPLAY - PLATINE DE COMMANDES AVEC AFFICHEUR - BEDIENTEIL MIT DISPLAY - TASTIERA CON DISPLAY - PLATINA MANDOS CON VISUALIZADOR (VP 4601)

Component side -Côté composants - Bestückungsseite - Lato componenti - Lado componentes

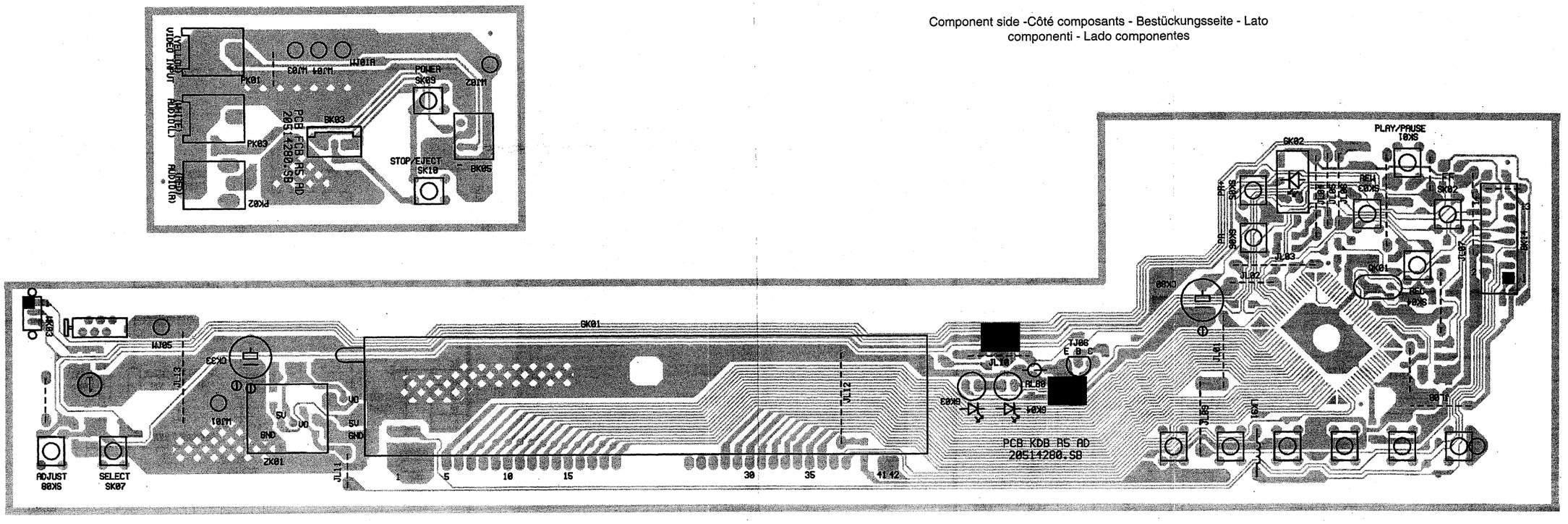

Solder side -Côté cuivre - Lötseite - Lato saldature - Lado del cobre

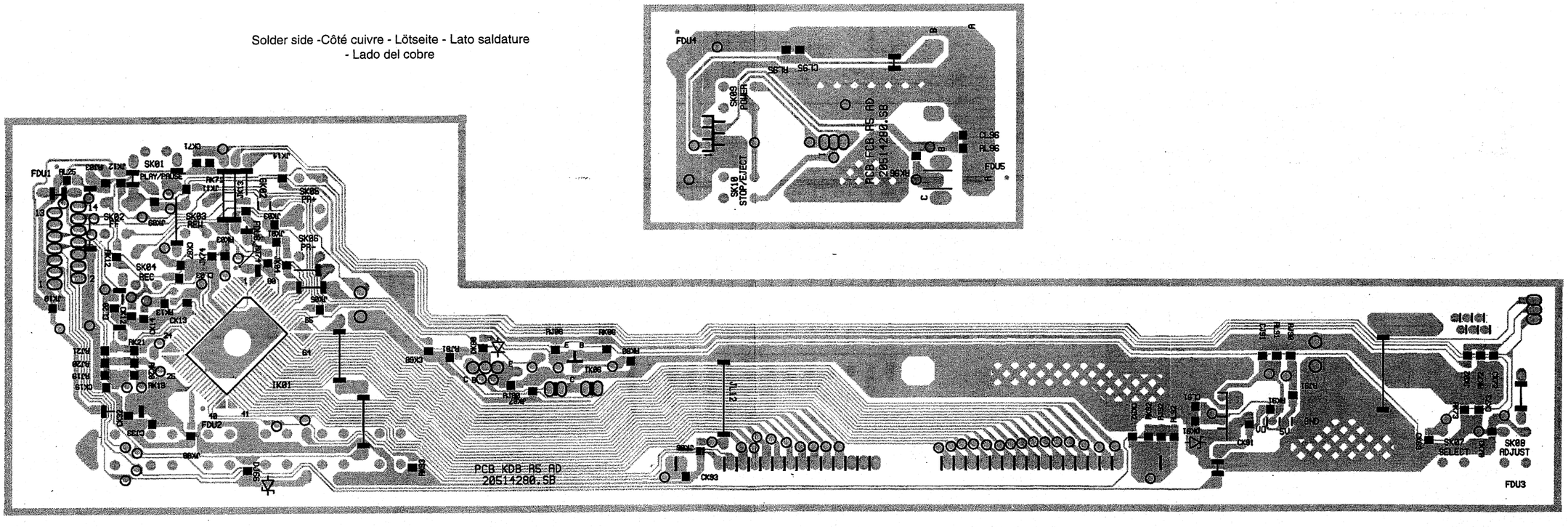

KEYBOARD WITH DISPLAY - PLATINE DE COMMANDES AVEC AFFICHEUR - BEDIENTEIL MIT DISPLAY - TASTIERA CON DISPLAY - PLATINA MANDOS CON VISUALIZADOR

SCHEMATIC DIAGRAM - SCHEMA DE PRINCIPE - SCHALTBILD - SCHEMA - ESQUEMA (M 9625 / M 9655)

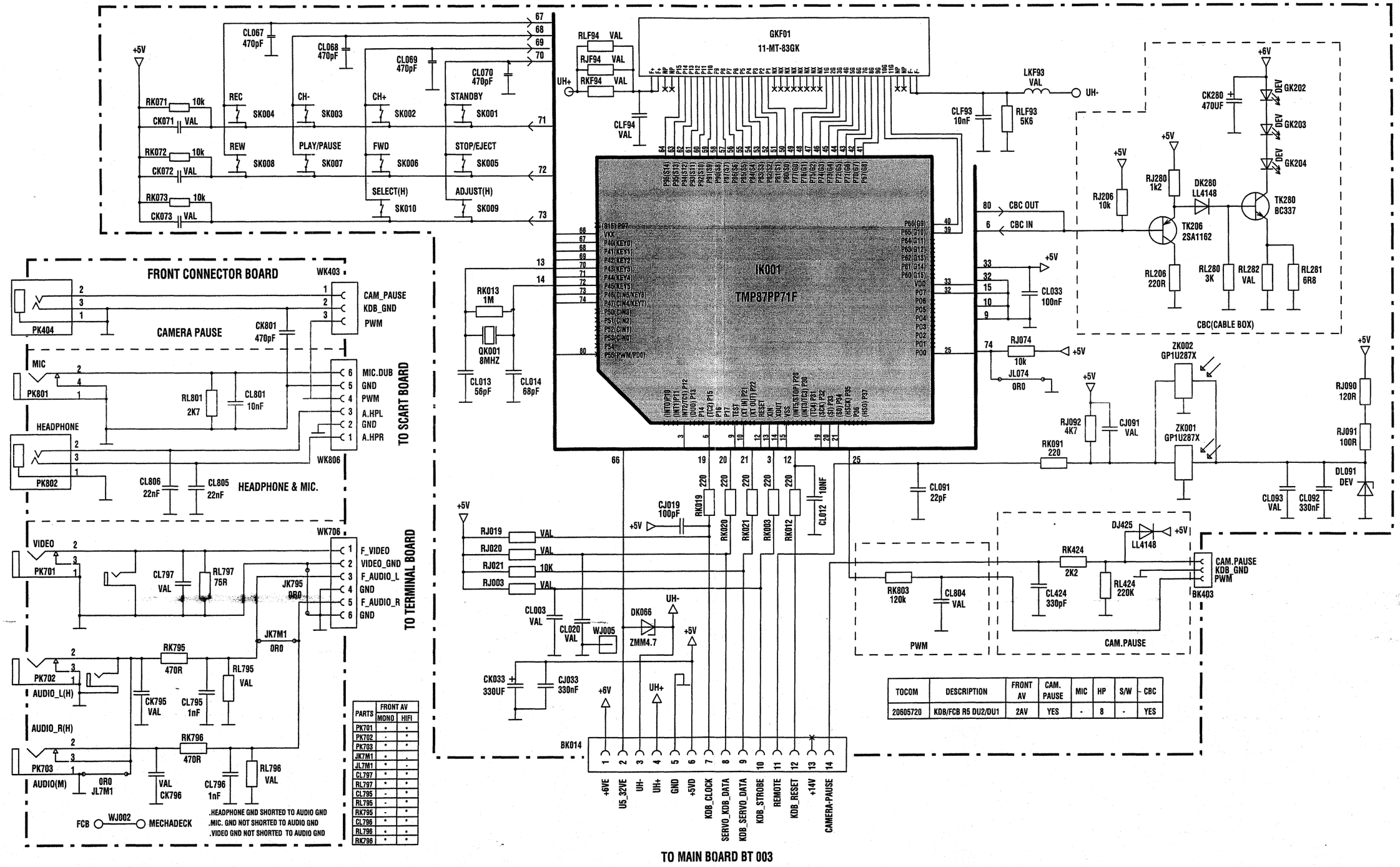

KEYBOARD WITH DISPLAY - PLATINE DE COMMANDES AVEC AFFICHEUR - BEDIENTEIL MIT DISPLAY - TASTIERA CON DISPLAY - PLATINA MANDOS CON VISUALIZADOR (M 9625 / M 9655)

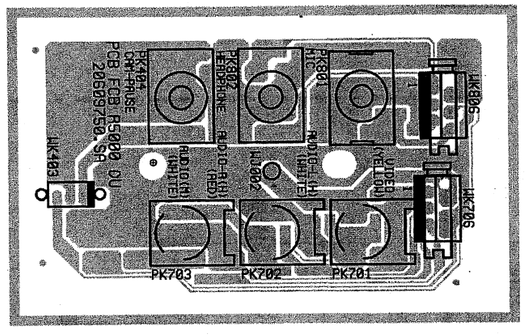

Component side -Côté composants - Bestückungsseite - Lato componenti - Lado componentes

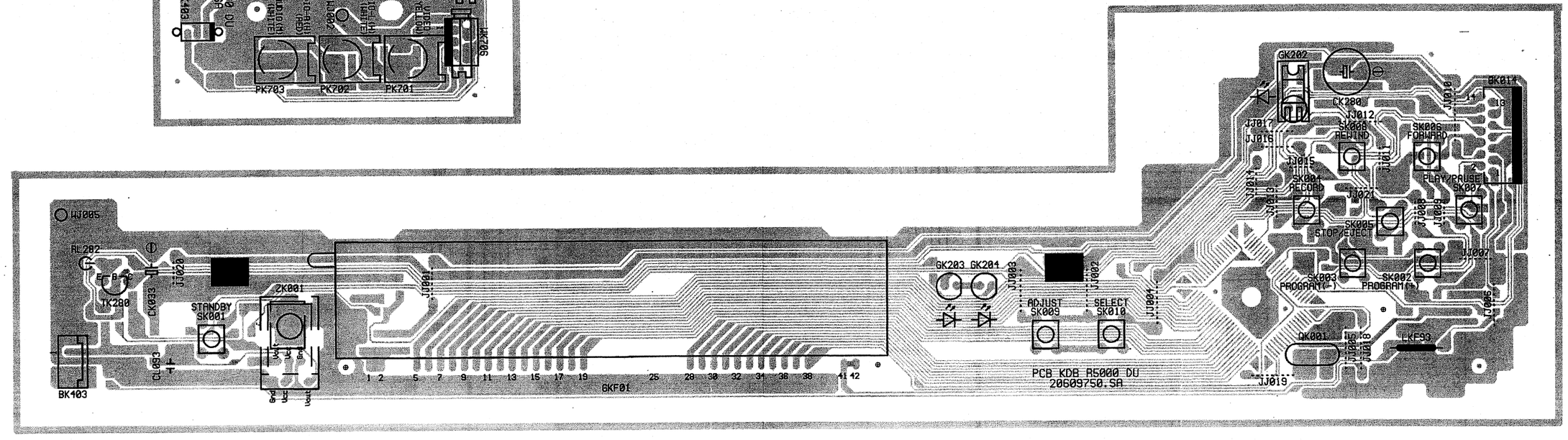

Solder side -Côté cuivre - Lötseite - Lato saldature - Lado del cobre

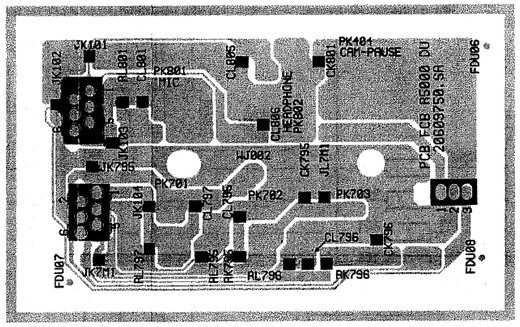

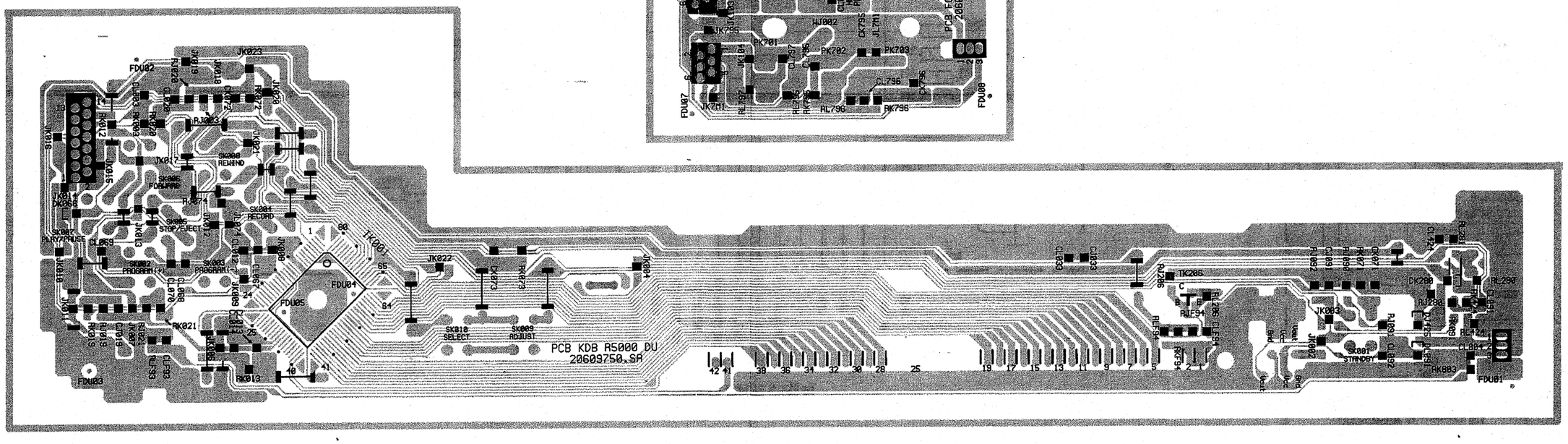

KEYBOARD WITH DISPLAY - PLATINE DE COMMANDES AVEC AFFICHEUR - BEDIENTEIL MIT DISPLAY - TASTIERA CON DISPLAY - PLATINA MANDOS CON VISUALIZADOR

SCHEMATIC DIAGRAM - SCHEMA DE PRINCIPE - SCHALTBILD - SCHEMA - ESQUEMA (T 8000)

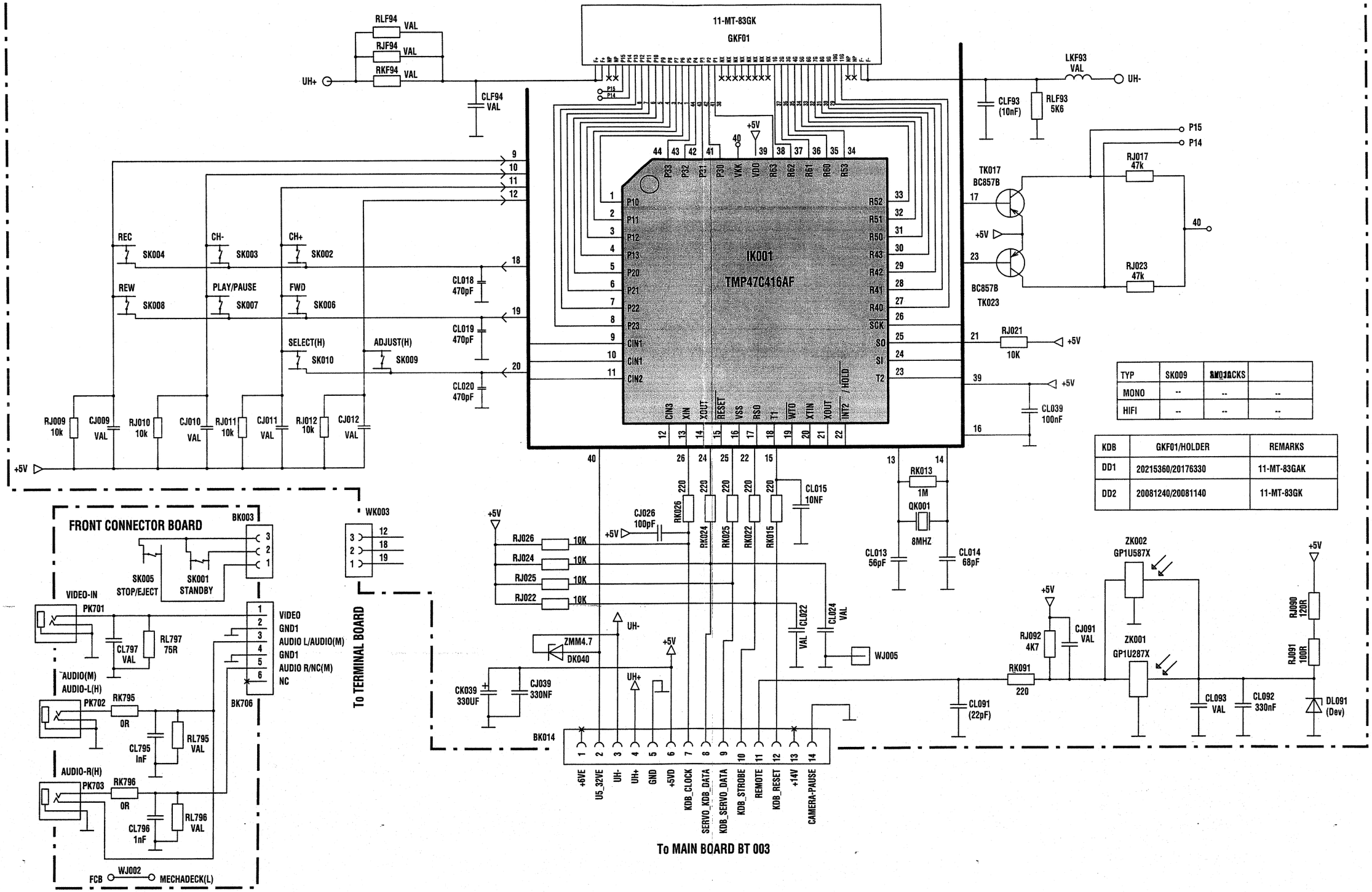

TYP	SK009	SK010	
MONO	--	--	--
HIFI	--	--	--

KDB	GKF01/HOLDER	REMARKS
DD1	20215360/20176330	11-MT-83GAK
DD2	20081240/20081140	11-MT-83GK

KEYBOARD WITH DISPLAY - PLATINE DE COMMANDES AVEC AFFICHEUR - BEDIENTEIL MIT DISPLAY - TASTIERA CON DISPLAY - PLATINA MANDOS CON VISUALIZADOR (T 8000)

Component side -Côté composants - Bestückungsseite - Lato componenti - Lado componentes

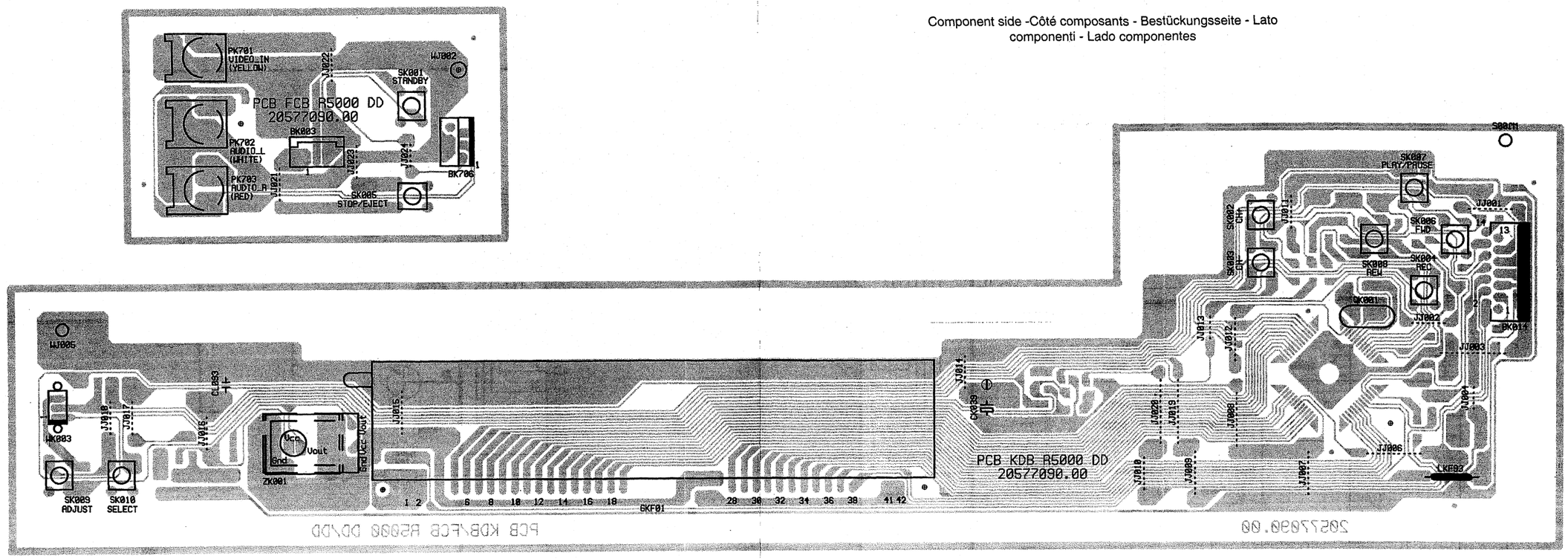

Solder side -Côté cuivre - Lötseite - Lato saldature - Lado del cobre

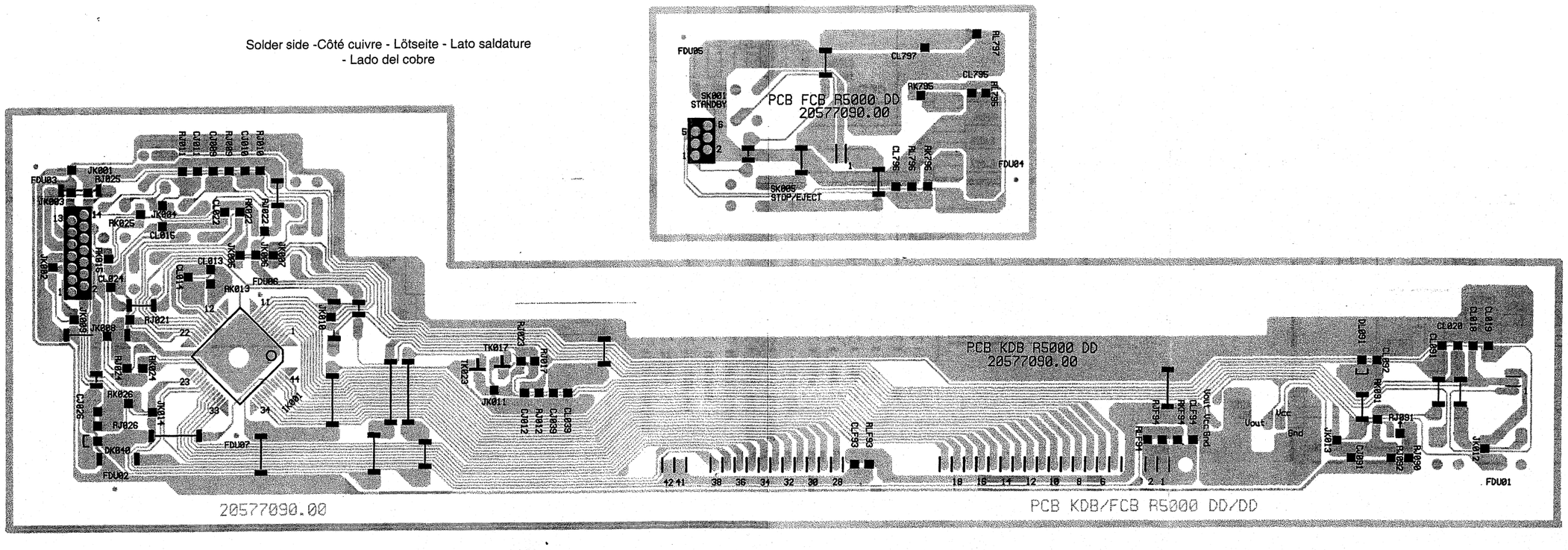

KEYBOARD WITH DISPLAY - PLATINE DE COMMANDES AVEC AFFICHEUR - BEDIENTEIL MIT DISPLAY - TASTIERA CON DISPLAY - PLATINA MANDOS CON VISUALIZADOR

SCHEMATIC DIAGRAM - SCHEMA DE PRINCIPE - SCHALTBILD - SCHEMA - ESQUEMA (M 9523)

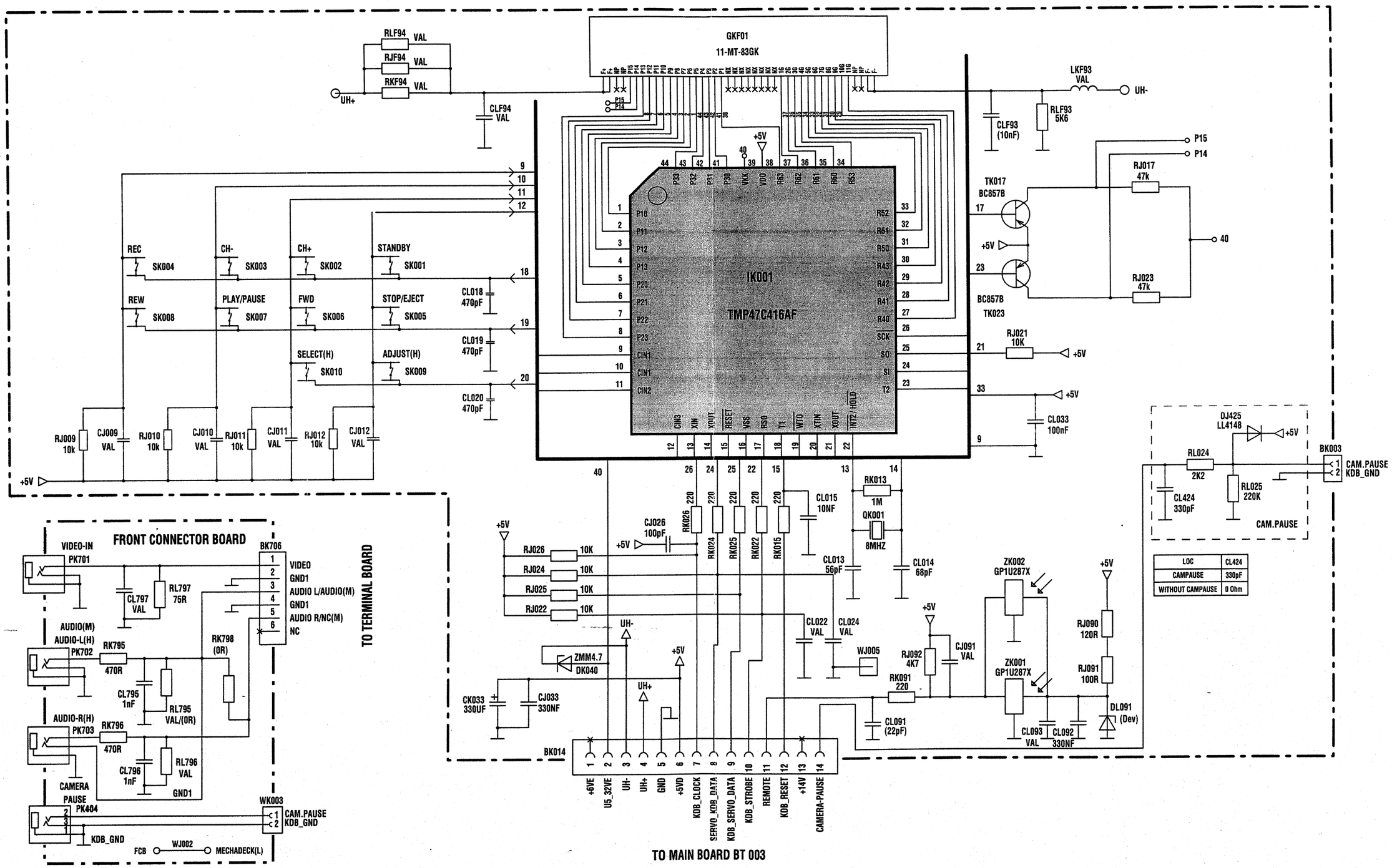

KEYBOARD WITH DISPLAY - PLATINE DE COMMANDES AVEC AFFICHEUR - BEDIENTEIL MIT DISPLAY - TASTIERA CON DISPLAY - PLATINA MANDOS CON VISUALIZADOR (M 9523)

Component side -Côté composants - Bestückungsseite - Lato componenti - Lado componentes

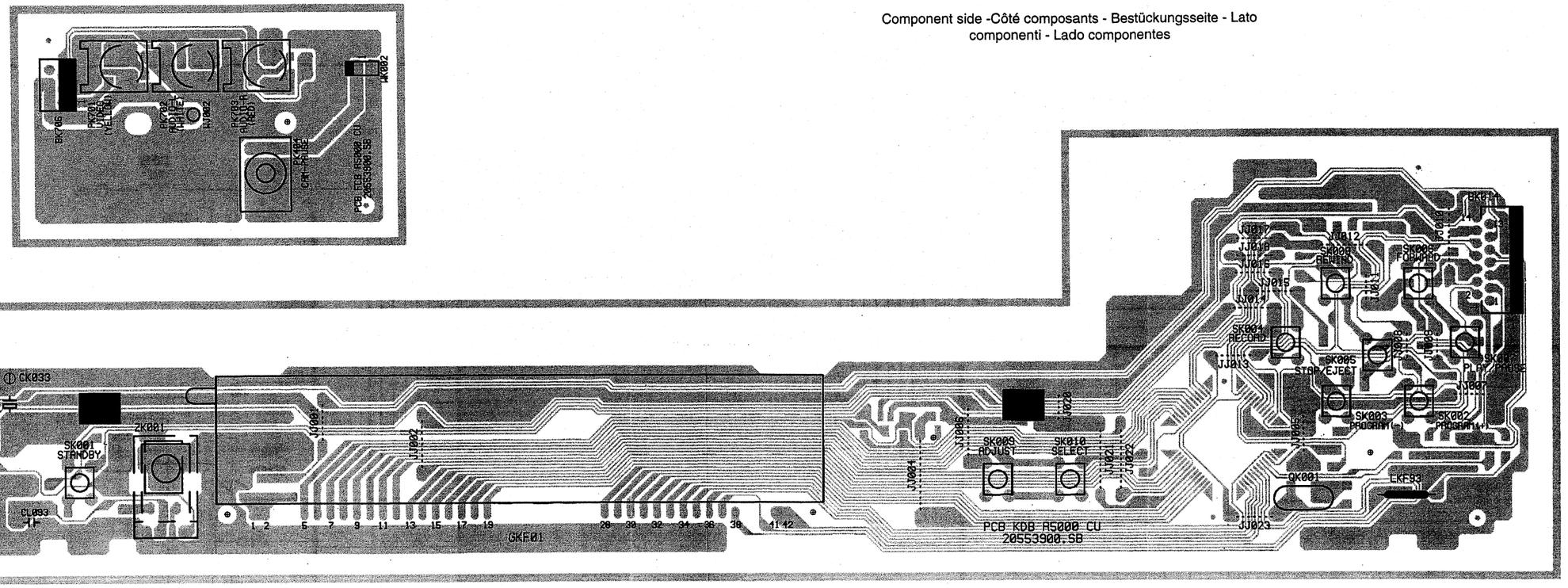

Solder side -Côté cuivre - Lötseite - Lato saldature - Lado del cobre

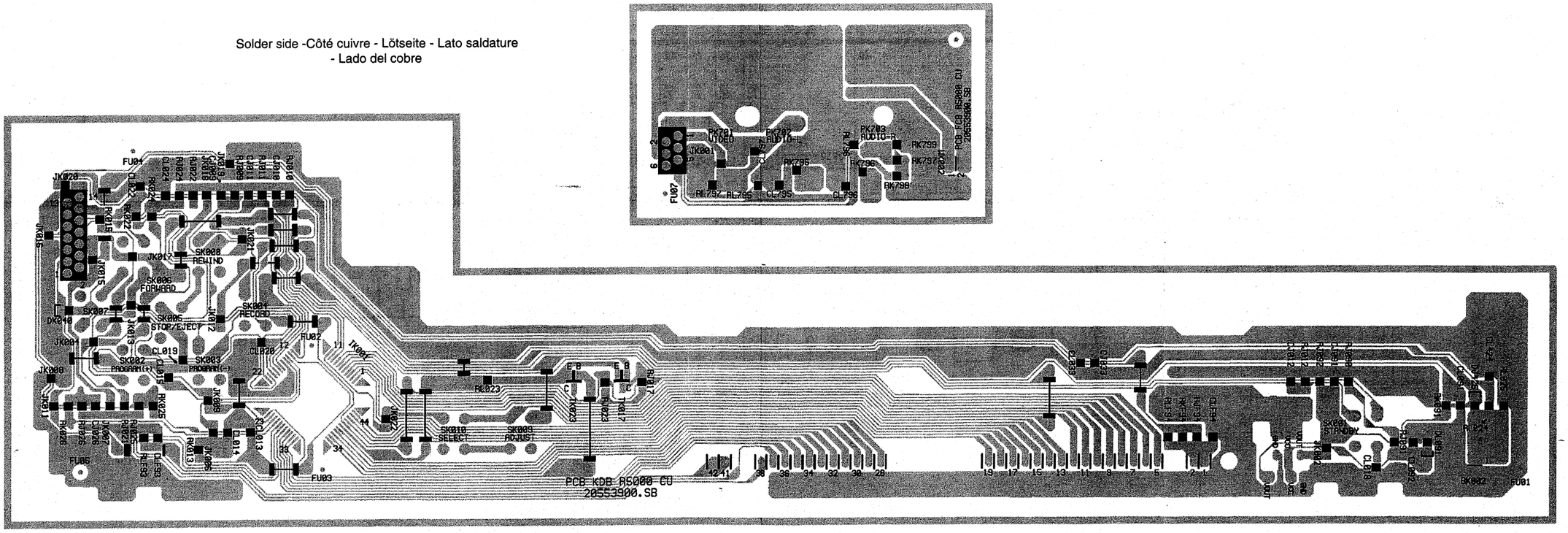

KEYBOARD WITH DISPLAY - PLATINE DE COMMANDES AVEC AFFICHEUR - BEDIENTEIL MIT DISPLAY - TASTIERA CON DISPLAY - PLATINA MANDOS CON VISUALIZADOR

SCHEMATIC DIAGRAM - SCHEMA DE PRINCIPE - SCHALTBILD - SCHEMA - ESQUEMA (VR 7027)

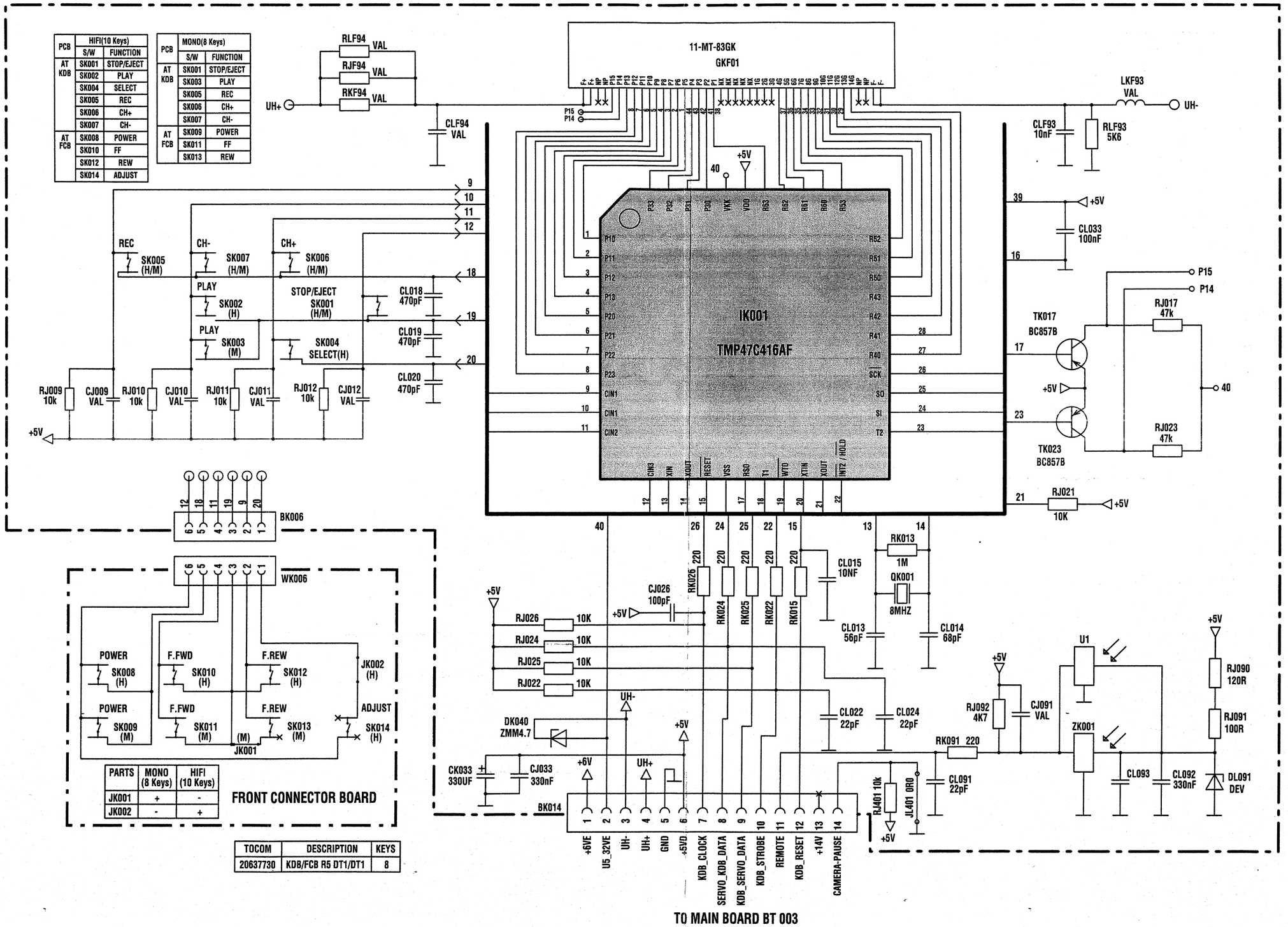

KEYBOARD WITH DISPLAY - PLATINE DE COMMANDES AVEC AFFICHEUR - BEDIENTEIL MIT DISPLAY - TASTIERA CON DISPLAY - PLATINA MANDOS CON VISUALIZADOR (VR 7027)

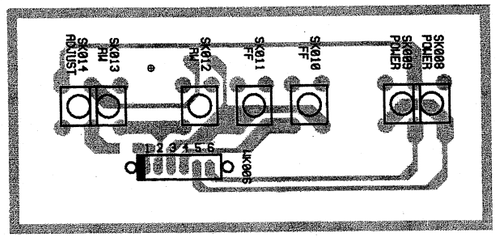

Component side -Côté composants - Bestückungsseite - Lato componenti - Lado componentes

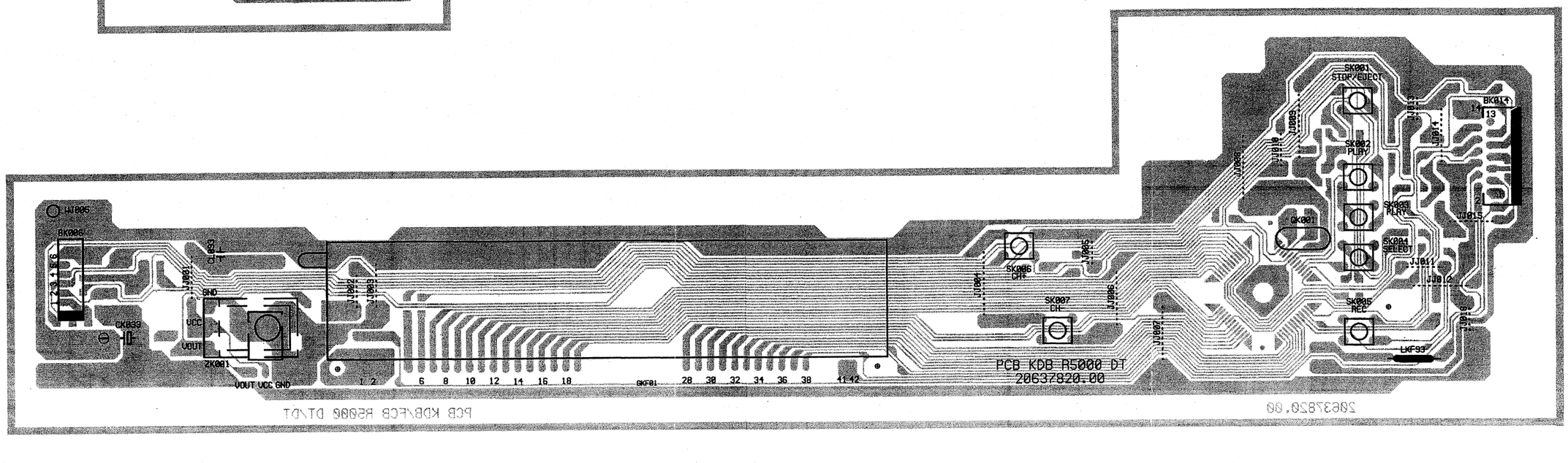

KEYBOARD WITH DISPLAY - PLATINE DE COMMANDES AVEC AFFICHEUR - BEDIENTEIL MIT DISPLAY - TASTIERA CON DISPLAY - PLATINA MANDOS CON VISUALIZADOR

SCHEMATIC DIAGRAM - SCHEMA DE PRINCIPE - SCHALTBILD - SCHEMA - ESQUEMA (V R 7021 / VR 7041)

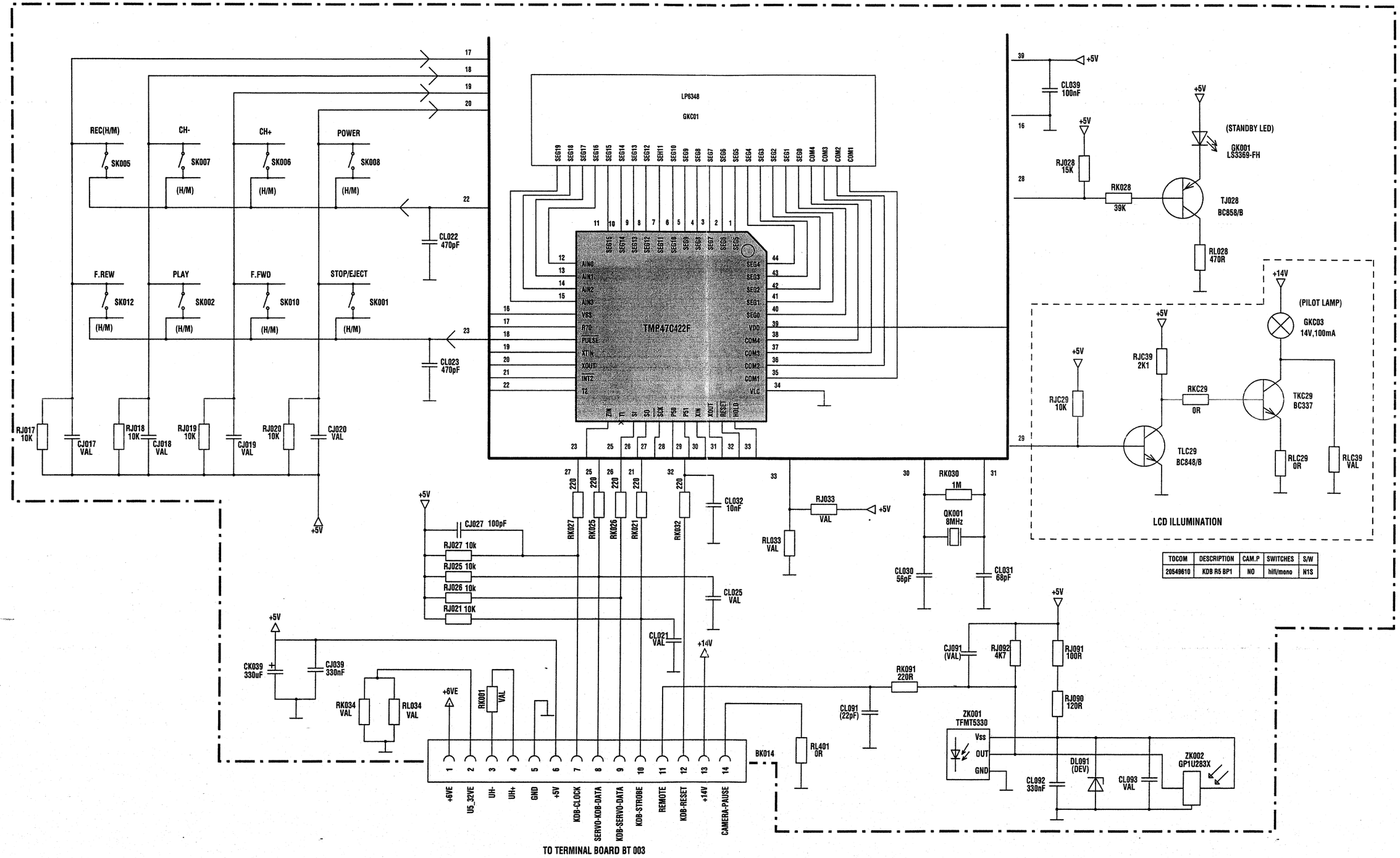

TOCOM	DESCRIPTION	CAM.P	SWITCHES	S/W
20549610	KDB R5 BP1	NO	hifi/mono	N1S

KEYBOARD WITH DISPLAY - PLATINE DE COMMANDES AVEC AFFICHEUR - BEDIENTEIL MIT DISPLAY - TASTIERA CON DISPLAY - PLATINA MANDOS CON VISUALIZADOR (VR 7021 / VR 7041)

Component side -Côté composants - Bestückungsseite - Lato componenti - Lado componentes

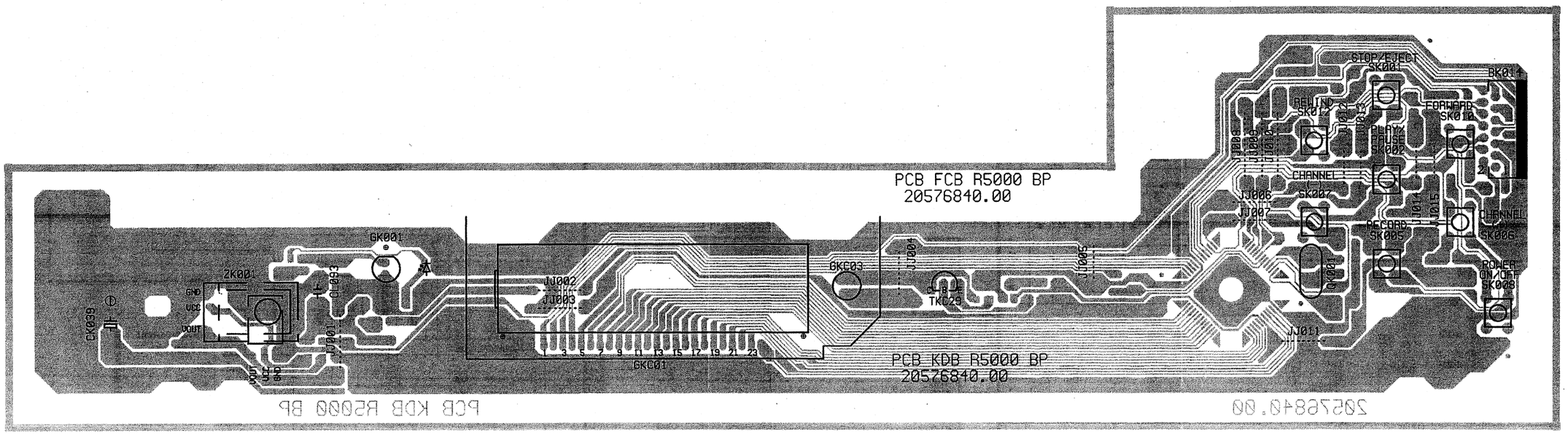

Solder side -Côté cuivre - Lötseite - Lato saldatura - Lado del cobre

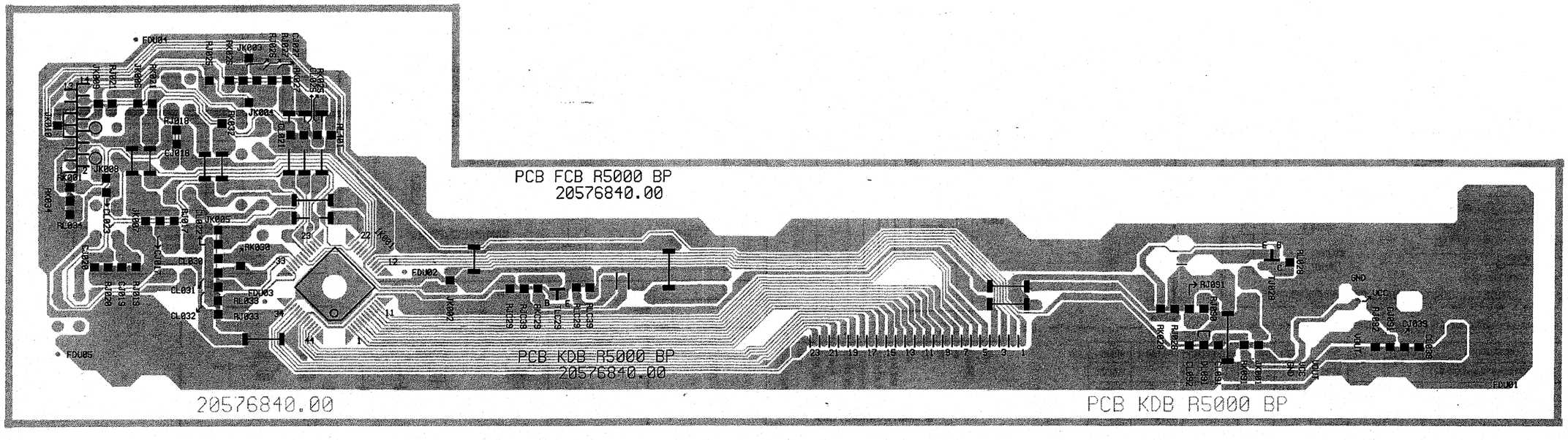

KEYBOARD WITH DISPLAY - PLATINE DE COMMANDES AVEC AFFICHEUR - BEDIENTEIL MIT DISPLAY - TASTIERA CON DISPLAY - PLATINA MANDOS CON VISUALIZADOR

SCHEMATIC DIAGRAM - SCHEMA DE PRINCIPE - SCHALTBILD - SCHEMA - ESQUEMA (V 1455 SENSAR)

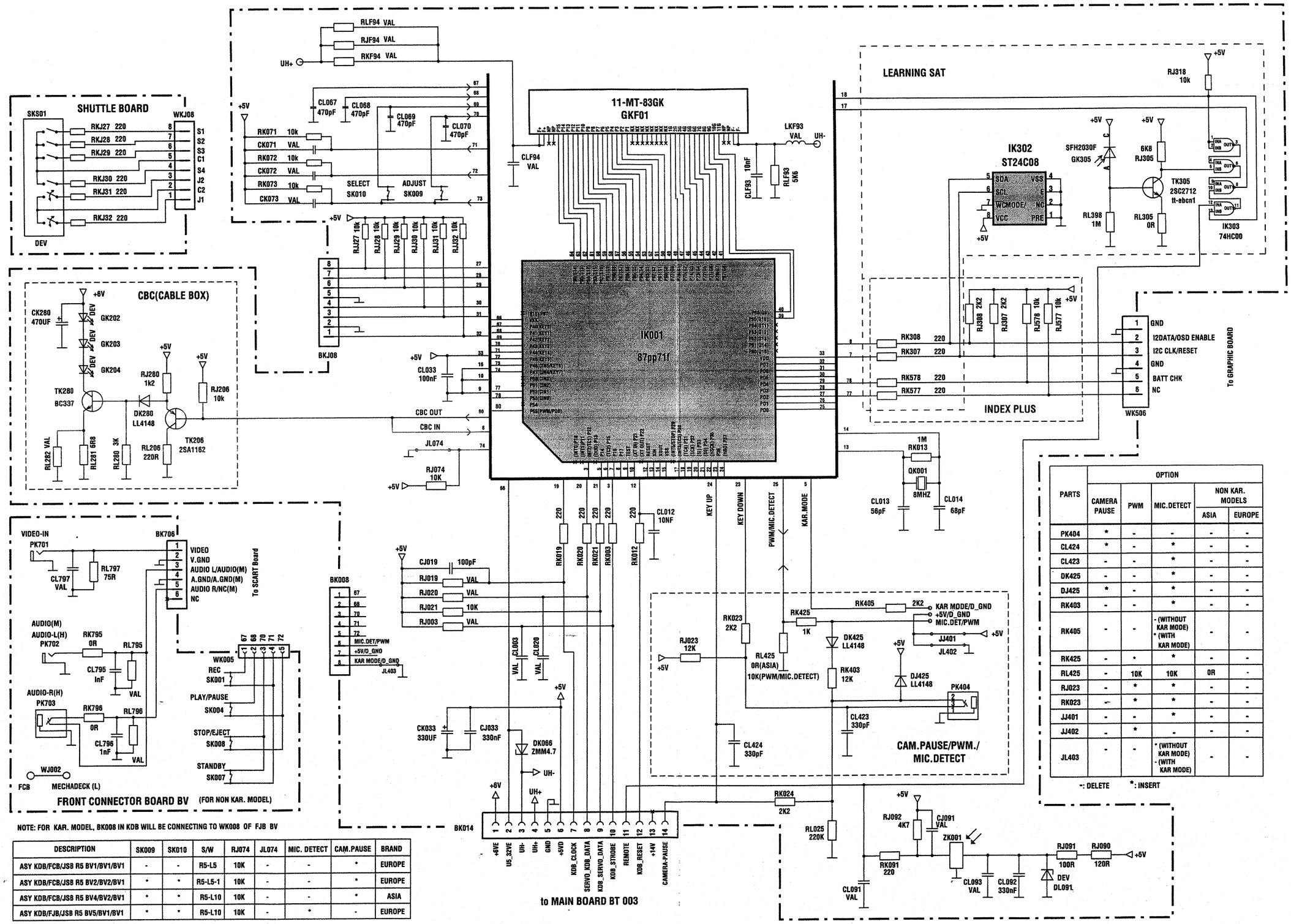

NOTE: FOR KAR. MODEL, BK008 IN KDB WILL BE CONNECTING TO WK008 OF FJB BV

DESCRIPTION	SK009	SK010	S/W	RJ074	JL074	MIC. DETECT	CAM.PAUSE	BRAND
ASY KDB/FCB/JSB R5 BV1/BV1/BV1	-	-	R5-L5	10K	-	-	*	EUROPE
ASY KDB/FCB/JSB R5 BV2/BV2/BV1	*	*	R5-L5-1	10K	-	-	*	EUROPE
ASY KDB/FCB/JSB R5 BV4/BV2/BV1	*	*	R5-L10	10K	-	-	*	ASIA
ASY KDB/FJB/JSB R5 BV5/BV1/BV1	*	*	R5-L10	10K	-	*	-	EUROPE

PARTS	OPTION				
	CAMERA PAUSE	PWM	MIC.DETECT	NON KAR. MODELS ASIA	NON KAR. MODELS EUROPE
PK404	*	-	-	-	-
CL424	*	-	*	-	-
CL423	-	-	*	-	-
DK425	-	-	*	-	-
DJ425	*	-	*	-	-
RK403	-	-	*	-	-
RK405	-	-	- (WITHOUT KAR MODE) * (WITH KAR MODE)	-	-
RK425	-	*	*	-	-
RL425	-	10K	10K	0R	-
RJ023	-	*	*	-	-
RK023	-	*	*	-	-
JJ401	-	-	*	-	-
JJ402	-	*	-	-	-
JL403	-	-	* (WITHOUT KAR MODE) - (WITH KAR MODE)	-	-

-: DELETE *: INSERT

KEYBOARD WITH DISPLAY - PLATINE DE COMMANDES AVEC AFFICHEUR - BEDIENTEIL MIT DISPLAY - TASTIERA CON DISPLAY - PLATINA MANDOS CON VISUALIZADOR
(V 1455 SENSAR)

Component side -Côté composants - Bestückungsseite - Lato componenti - Lado componentes

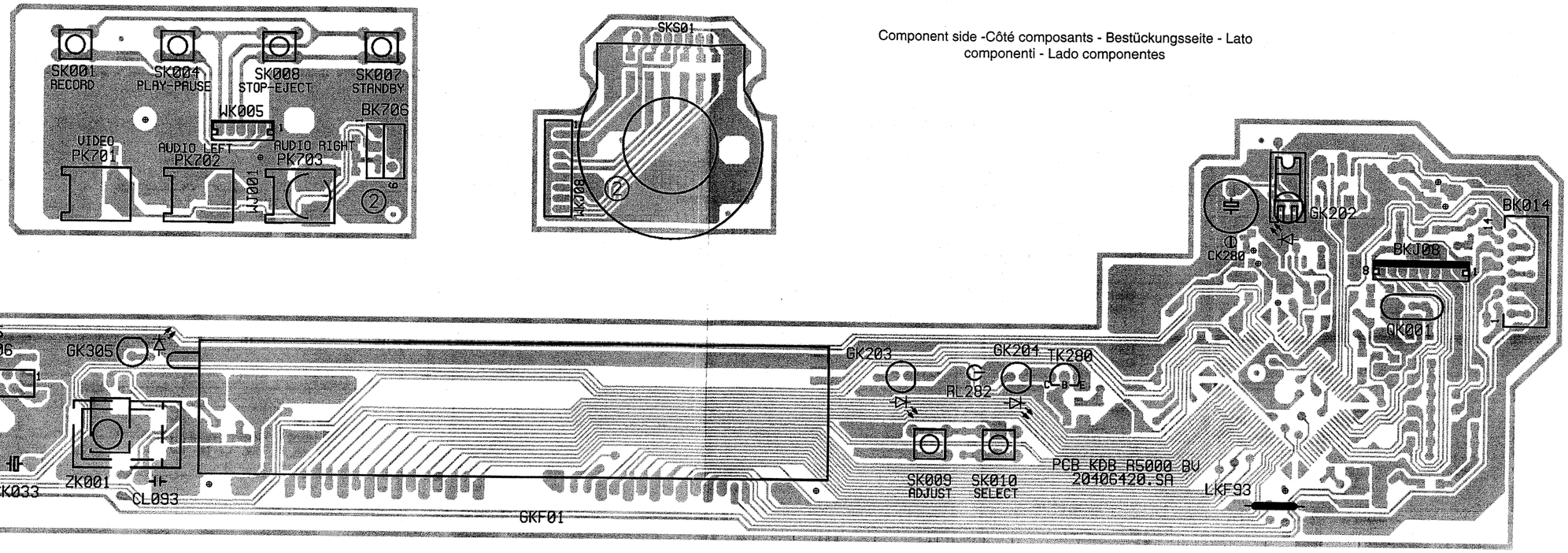

Solder side -Côté cuivre - Lötseite - Lato saldature - Lado del cobre

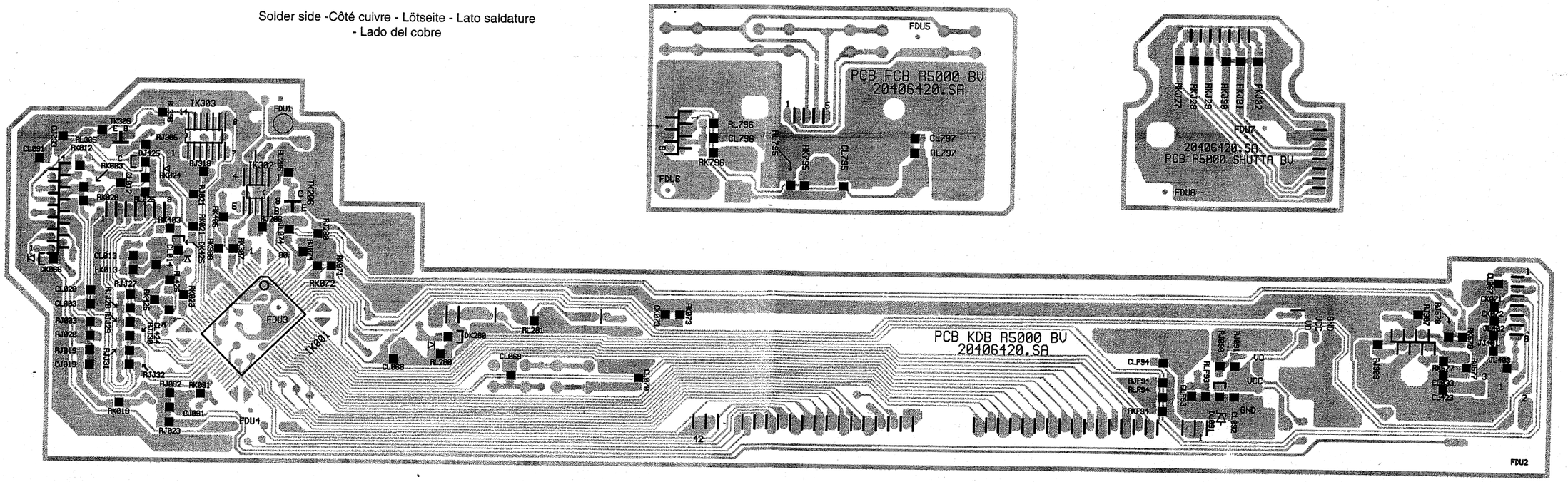

- BEDIENTEIL MIT DISPLAY - TASTIERA CON DISPLAY - PLATINA MANDOS CON VISUALIZADOR

Component side -Côté composants - Bestückungsseite - Lato componenti - Lado componentes

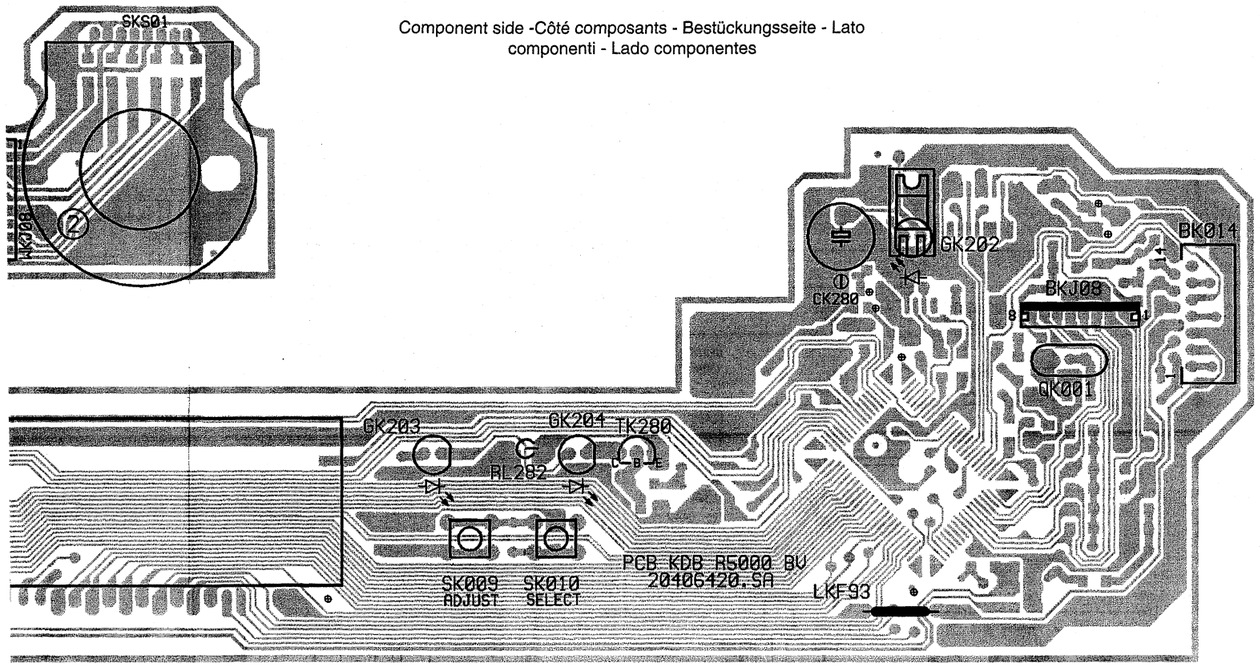

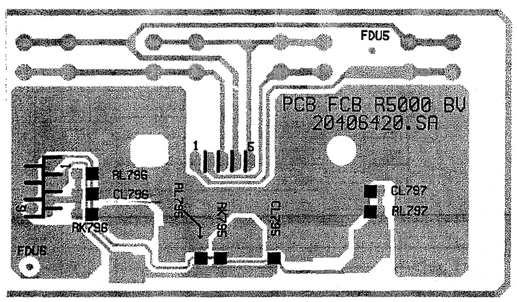

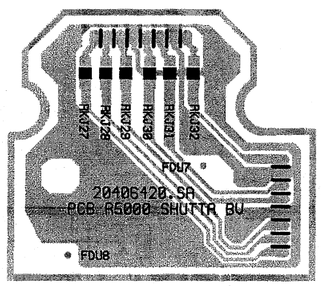

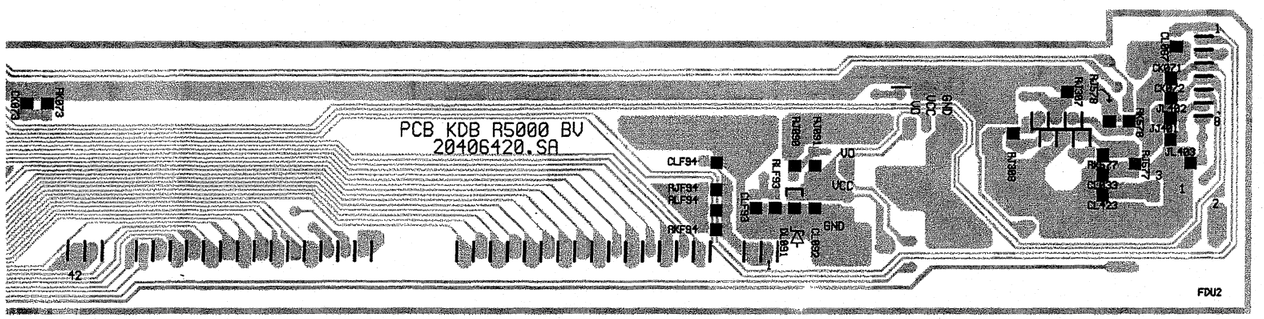

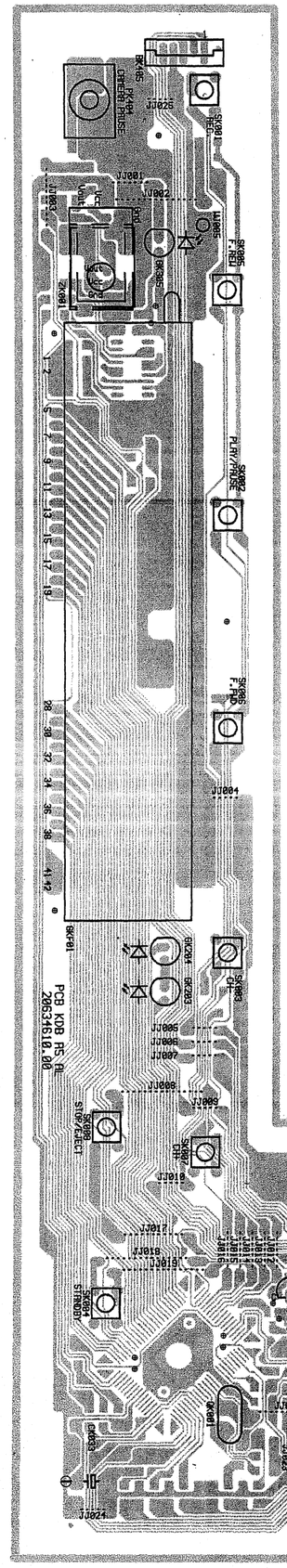

KEYBOARD WITH DISPLAY - PLATINE DE COMMANDES AVEC AFFICHEUR - BEDIENTEIL MIT DISPLAY - TASTIERA CON DISPLAY - PLATINA MANDOS CON VISUALIZADOR (V 1250 SVM / V 1450 SVM)

Component side -Côté composants - Bestückungsseite - Lato componenti - Lado componentes

KEYBOARD WITH DISPLAY -
PLATINE DE COMMANDES AVEC AFFICHEUR -
BEDIENTEIL MIT DISPLAY -
TASTIERA CON DISPLAY -
PLATINA MANDOS CON VISUALIZADOR
(V 1250 SVM / V 1450 SVM)

Solder side -Côté cuivre - Lötseite - Lato saldature
- Lado del cobre

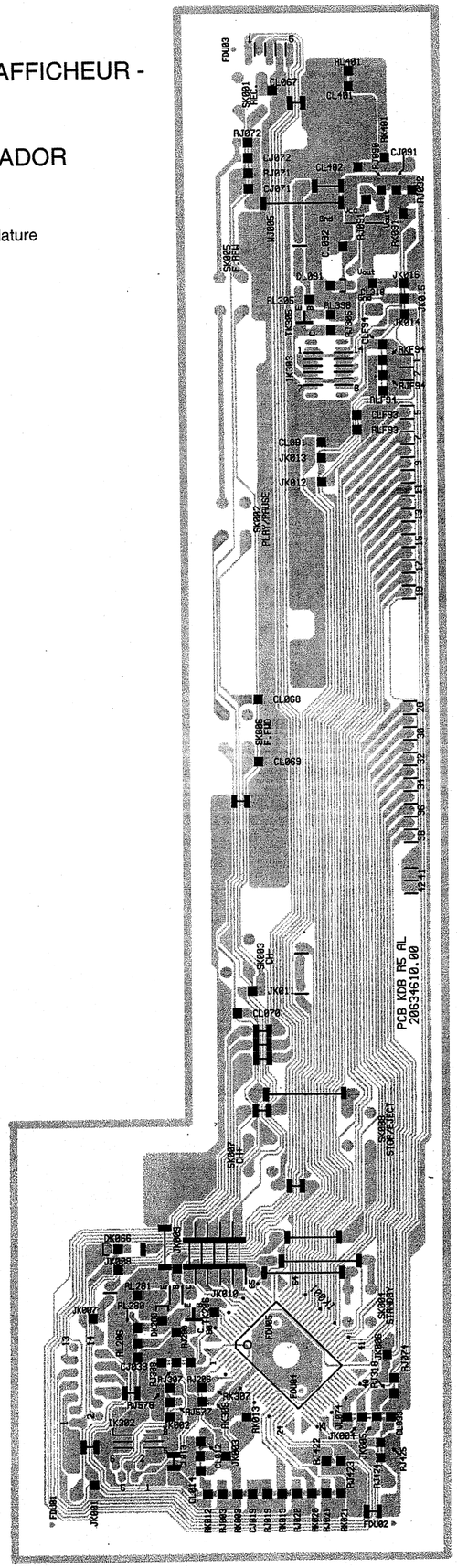

KEYBOARD WITH DISPLAY - PLATINE DE COMMANDES AVEC AFFICHEUR - BEDIENTEIL TASTIERA CON DISPLAY - PLATINA MANDOS CON VISUALIZADOR

SCHEMATIC DIAGRAM - SCHEMA DE PRINCIPE - SCHALTBILD - SCHEMA - ESQUEMA (V 1250 SSVM / V 1

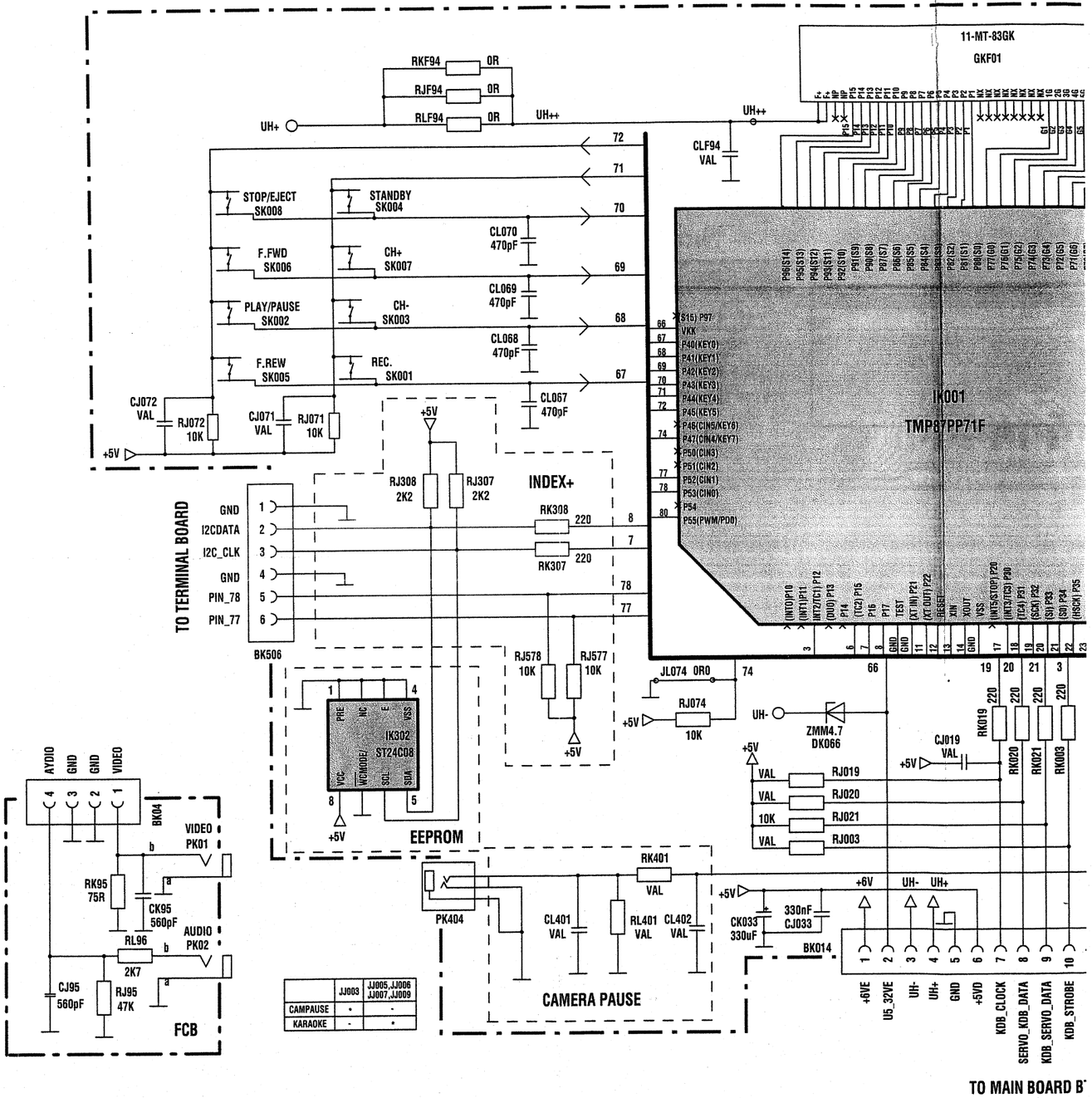

	JJ003	JJ005,JJ006 JJ007,JJ009
CAMPAUSE	•	-
KARAOKE	-	•

KEYBOARD WITH DISPLAY - PLATINE DE COMMANDES AVEC AFFICHEUR - BEDIENTEIL MIT DISPLAY - TASTIERA CON DISPLAY - PLATINA MANDOS CON VISUALIZADOR

SCHEMATIC DIAGRAM - SCHEMA DE PRINCIPE - SCHALTBILD - SCHEMA - ESQUEMA (V 1250 SSVM / V 1450 SSVM)

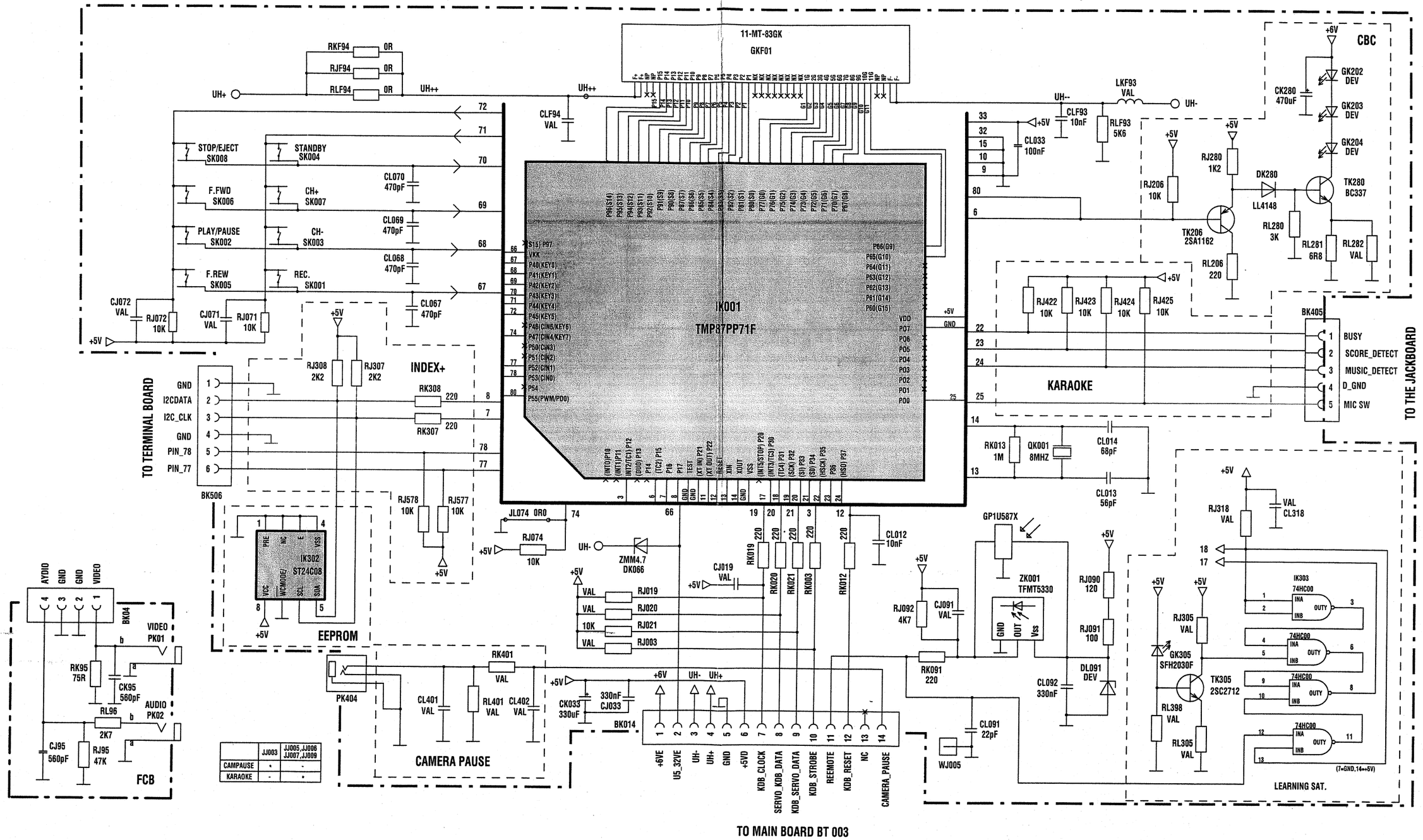

AUDIO / SCART CONNECTION BOARD - PLATINE AUDIO / PRISES SCART - LEITERPLATTE AUDIO / SCART ANSCHLUSS - PIASTRA AUDIO / SCART - PLATINA A

SCHEMATIC DIAGRAM -SCHEMA DE PRINCIPE - SCHALTBILD - SCHEMA - ESQUEMA

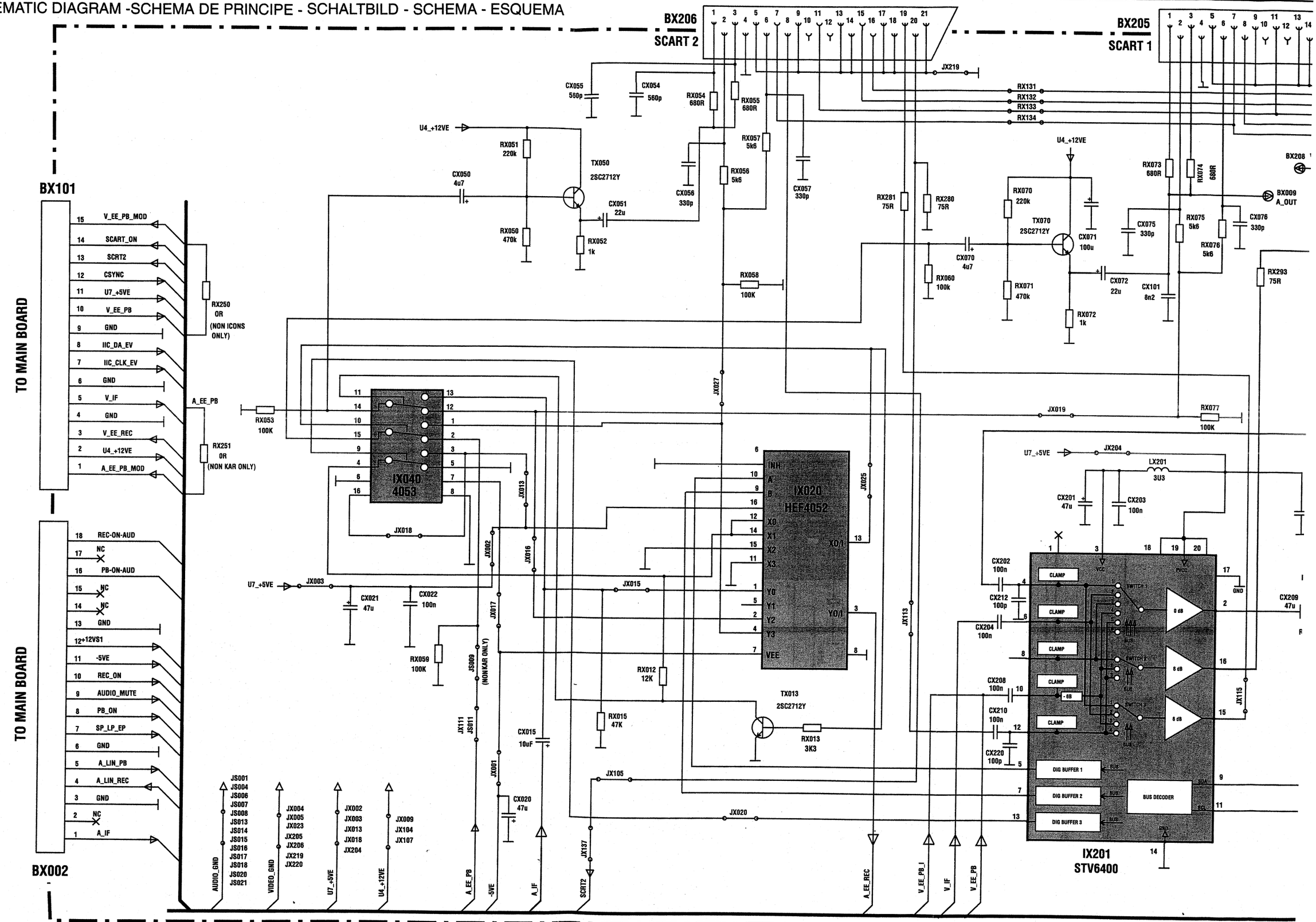

CART - PLATINA AUDIO / SCART

(VP 2601 / VP 4601 / T 8000 / M 9523 / VR 7021 / VR 7027 / VR 7041 / V 1250 SVM / V 1450 SVM)

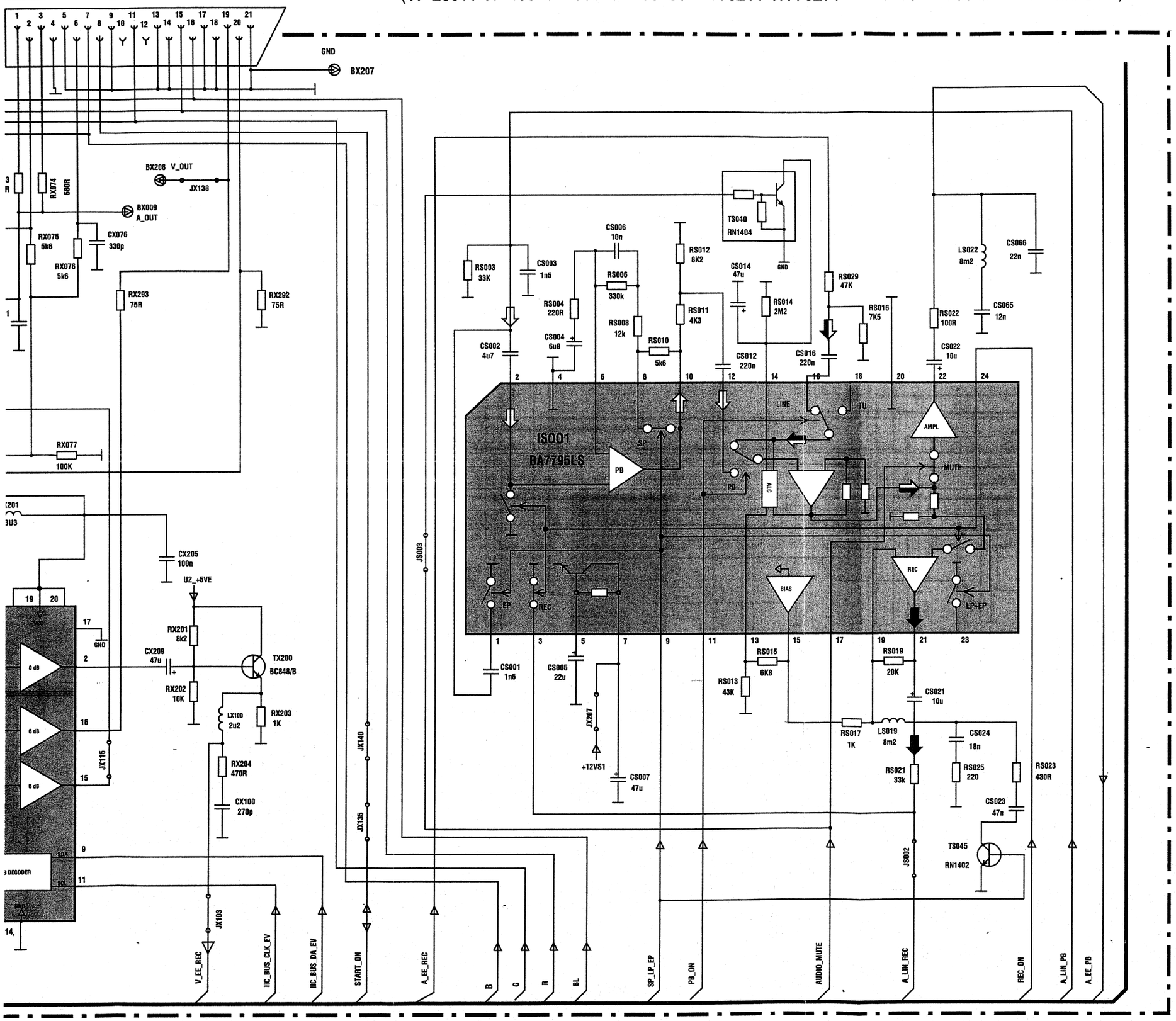

AUDIO / SCART CONNECTION BOARD - PLATINE AUDIO / PRISES SCART - LEITERPLATTE AUDIO / SCART ANSCHLUSS - PIASTRA AUDIO / SCART - PLATINA AUDIO / S

SCHEMATIC DIAGRAM -SCHEMA DE PRINCIPE - SCHALTBILD - SCHEMA - ESQUEMA

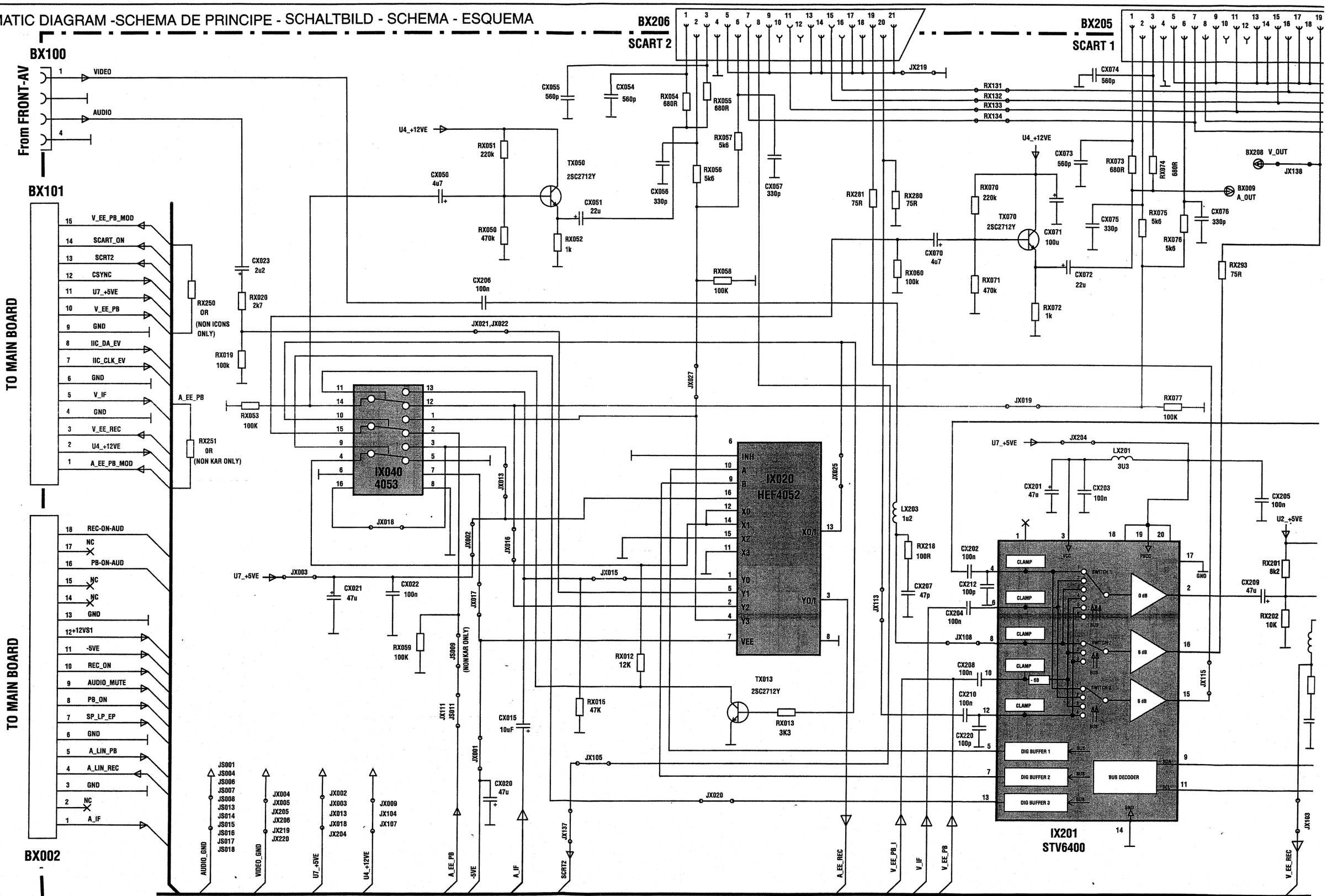

- PLATINA AUDIO / SCART

(VP 2651 / M 9625)

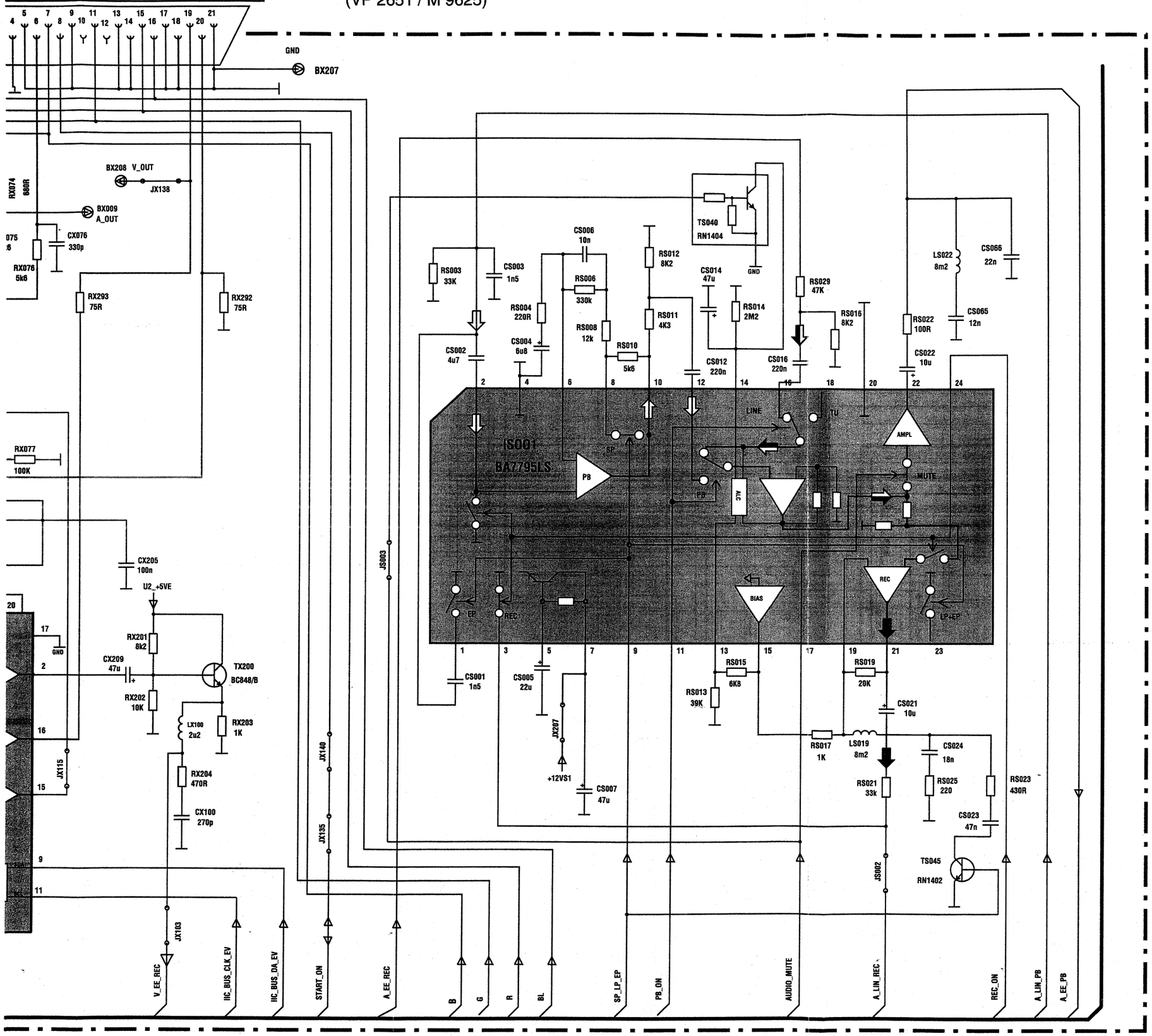

AUDIO / SCART CONNECTION BOARD - PLATINE AUDIO / PRISES SCART - LEITERPLATTE AUDIO / SCART ANSCHLUSS - PIASTRA AUDIO / SCART - PLATINA AUDIO / SCART

MEASUREMENTS - MESURES - MESSUNGEN - MISURE - MEDIDAS

VIDEO		MODE		
LOC	PIN	EE	PLAY	REC.
IS001	1	0	0	0
	2	2	2	2
	3	0	0	0
	4	0	0	0
	5	12.3	12.3	12.3
	6	2	2	2
	7	12.4	12.4	12.4
	8	2.1	2.1	2.1
	9	0.1	0.1	0.1
	10	2.1	2.1	2.1
	11	0	0	0
	12	5.8	5.8	5.8
	13	5	5	5
	14	0	0	0
	15	5.9	5.9	5.9
	16	5.8	5.8	5.8
	17	0	0	0
	18	0	0	0
	19	5.9	5.9	5.9
	20	0	0	0
	21	5.9	5.9	5.9
	22	5.9	5.9	5.9
	23	0	0	0
	24	0	0	4.8
IX020	1	0	0	0
	2	0	0	0
	3	0	0	0
	4	0	0	0
	5	0	0	0
	6	0	0	0
	7	0	0	0
	8	0	0	0
	9	5.2	5.2	5.2
	10	0	0	0
	11	0	0	0
	12	0	0	0
	13	0	0	0
	14	0	0	0
	15	0	0	0
	16	5.2	5.2	5.2

VIDEO		MODE		
LOC	PIN	EE	PLAY	REC.
IX040	1	0	0	0
	2	0	0	0
	3	5.2	5.2	5.2
	4	0	0	0
	5	0	0	0
	6	0	0	0
	7	0	0	0
	8	0	0	0
	9	0	0	0
	10	0	0	0
	11	0	0	0
	12	0	0	0
	13	4	4	4
	14	0	0	0
	15	0	0	0
	16	5.2	5.2	5.2
IX201	1	0	0	0
	2	1.2	1.2	1.2
	3	5.2	5.2	5.2
	4	1.9	1.9	1.9
	5	0.1	0.1	0.1
	6	1.9	1.9	1.9
	7	5.2	5.2	5.2
	8	1.5	1.5	1.5
	9	4.4	4.4	4.4
	10	2.3	2.3	2.32
	11	4.5	4.5	4.5
	12	1.5	1.5	1.5
	13	0.1	0.1	0.1
	14	0	0	0
	15	1.8	1.8	1.8
	16	1.8	1.8	1.8
	17	0	0	0
	18	5.2	5.2	5.2
	19	5.2	5.2	5.2
	20	5.2	5.2	5.2
TS040	E	0	0	0
	B	0	0	0
	C	0	0	0

VIDEO		MODE		
LOC	PIN	EE	PLAY	REC.
TS045	E	0	0	0
	B	0	0	0
	C	0	0	0
TX013	E	0	0	0
	B	0	0	0
	C	0	0	0
TX050	E	4.5	4.5	4.5
	B	5.2	5.2	5.2
	C	12.8	12.8	12.8
TX070	E	4.5	4.5	4.5
	B	5.2	5.2	5.2
	C	12.8	12.8	12.8
TX200	E	2.5	2.5	2.5
	B	3.1	3.1	3.1
	C	5.6	5.6	5.6

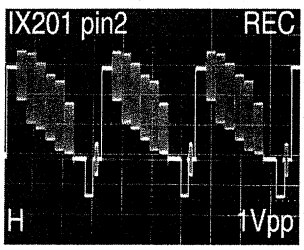

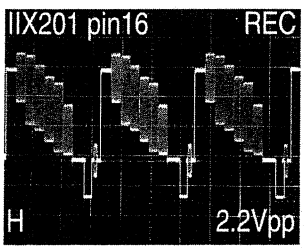

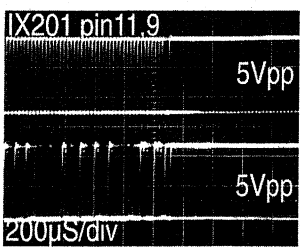

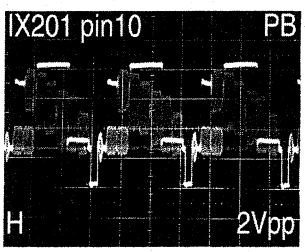

AUDIO / SCART CONNECTION BOARD - PLATINE AUDIO / PRISES SCART - LEITERPLATTE AUDIO / SCART ANSCHLUSS - PIASTRA AUDIO / SCART - PLATINA AUDIO / SCART

Component side -Côté composants - Bestückungsseite - Lato componenti - Lado componentes

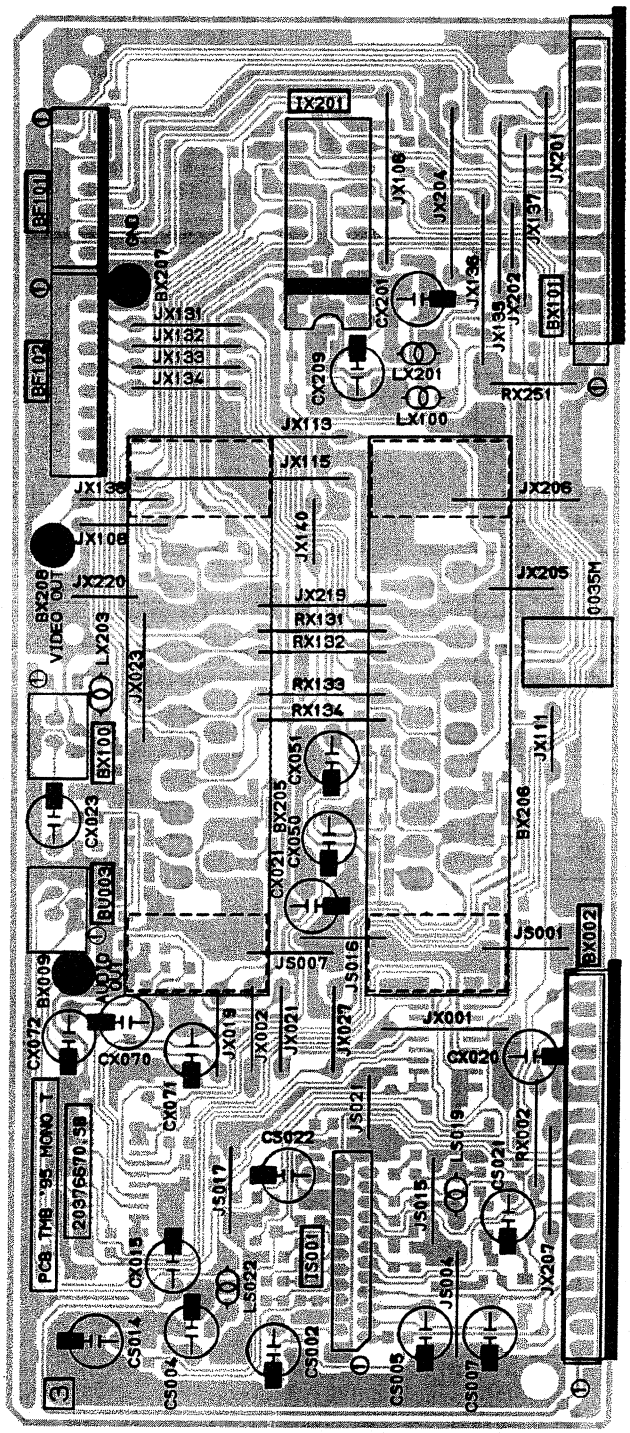

Solder side -Côté cuivre - Lötseite - Lato saldature - Lado del cobre

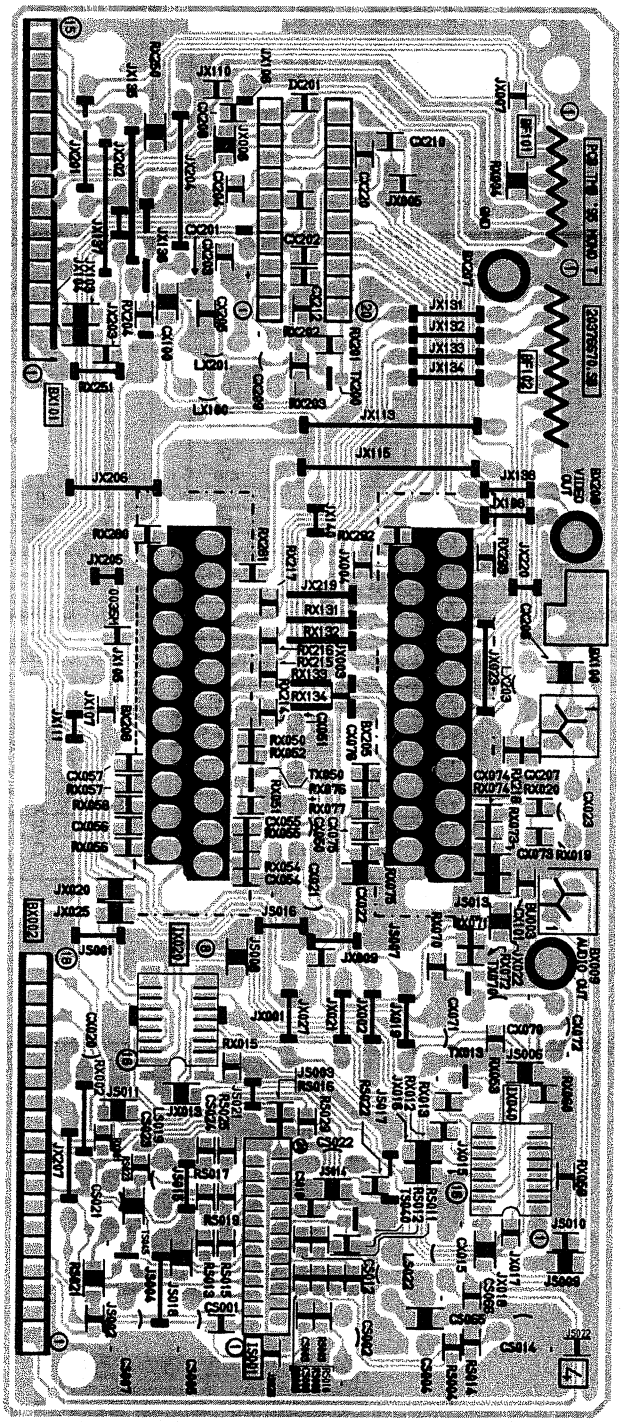

AUDIO / SCART CONNECTION BOARD - PLATINE AUDIO / PRISES SCART - LEITERPLATTE AUDIO / SCART ANSCHLUSS - PIASTRA AUDIO / SCART - PLATINA AUDIO

SCHEMATIC DIAGRAM -SCHEMA DE PRINCIPE - SCHALTBILD - SCHEMA - ESQUEMA

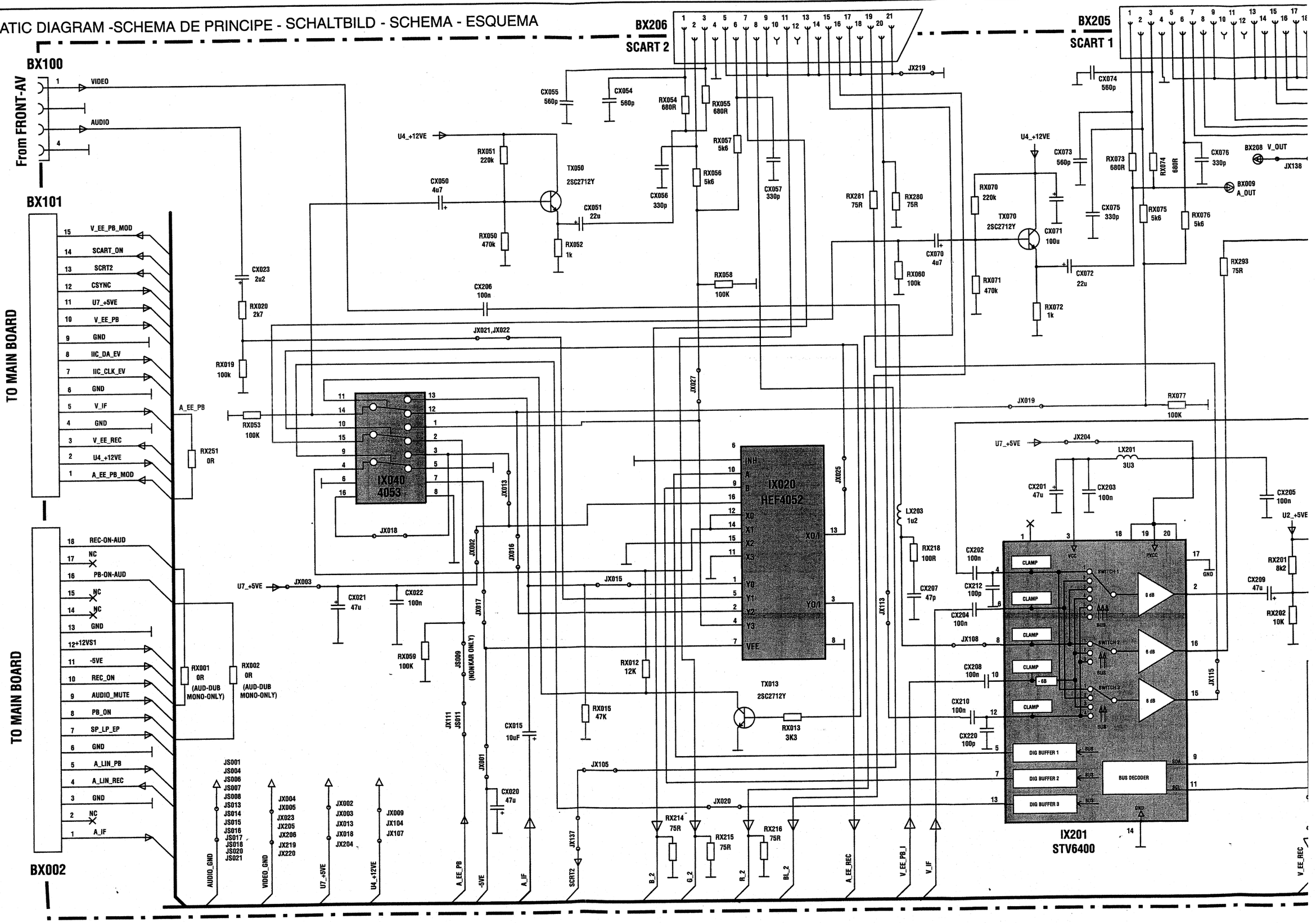

CART - PLATINA AUDIO / SCART

(V 1455 SENSAR)

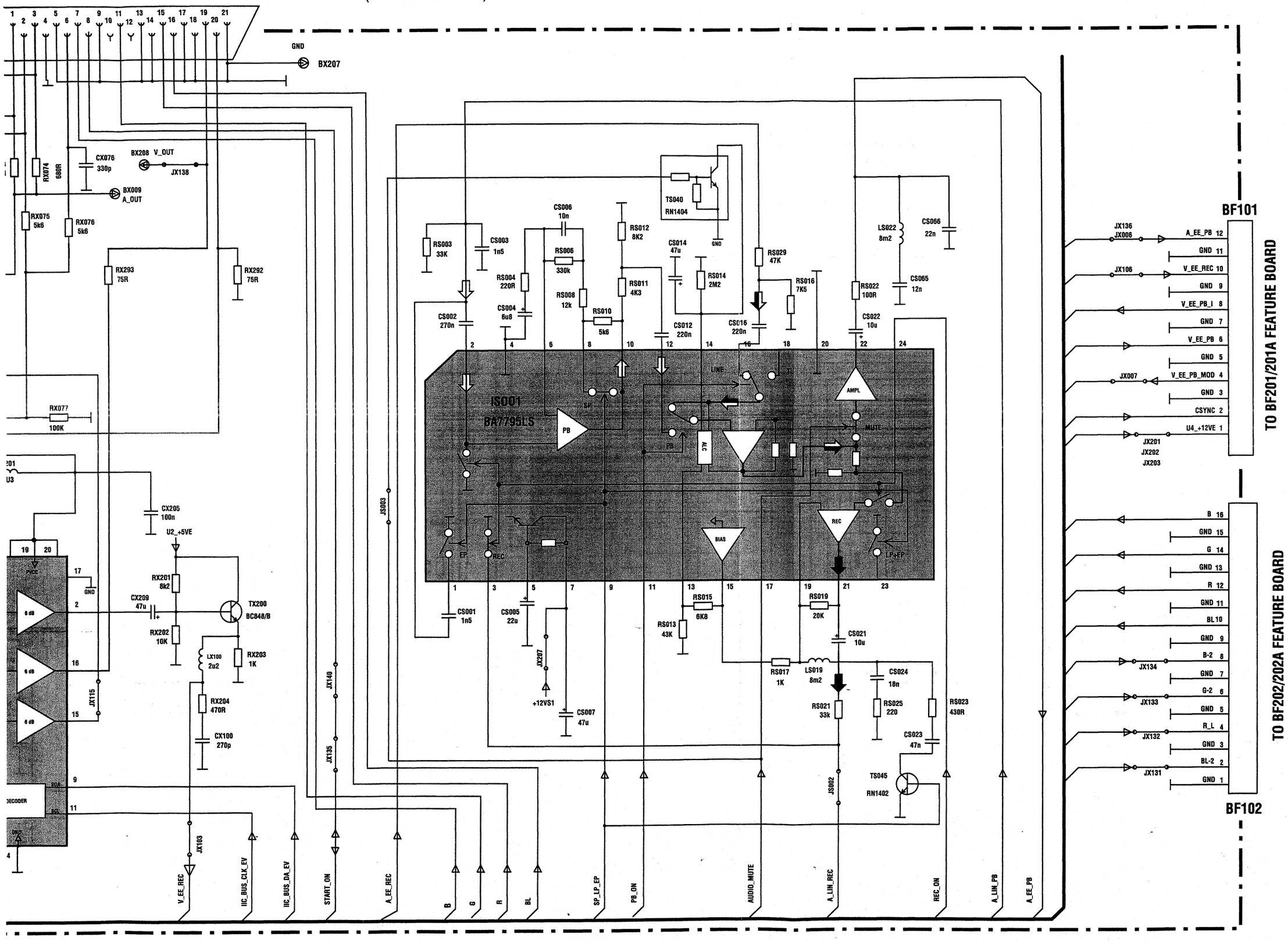

AUDIO / SCART CONNECTION BOARD - PLATINE AUDIO / PRISES SCART - LEITERPLATTE AUDIO / SCART ANSCHLUSS - PIASTRA AUDIO / SCART - PLATINA AUDIO / S

SCHEMATIC DIAGRAM -SCHEMA DE PRINCIPE - SCHALTBILD - SCHEMA - ESQUEMA

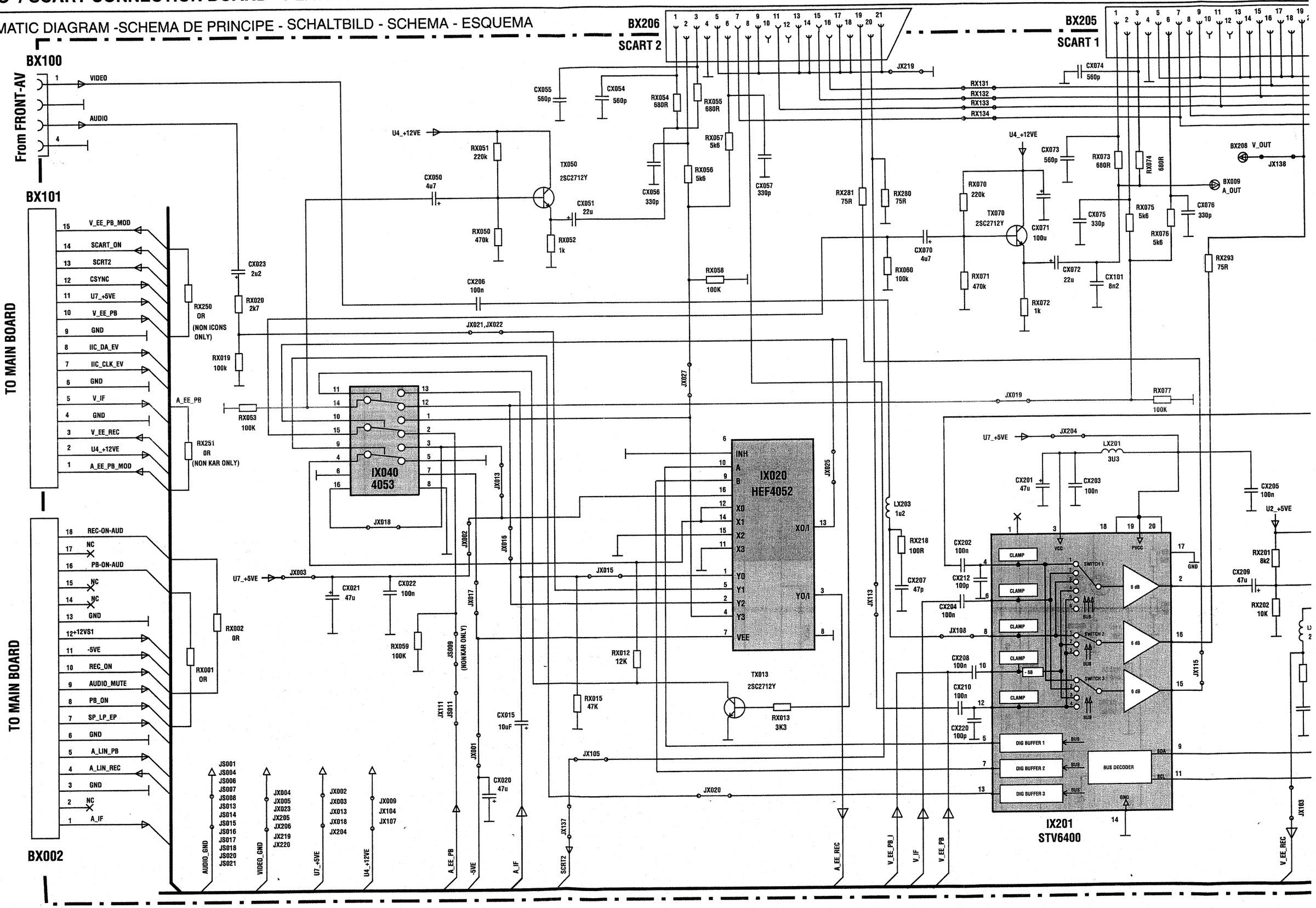

T - PLATINA AUDIO / SCART

(VP 4681 / M 9655)

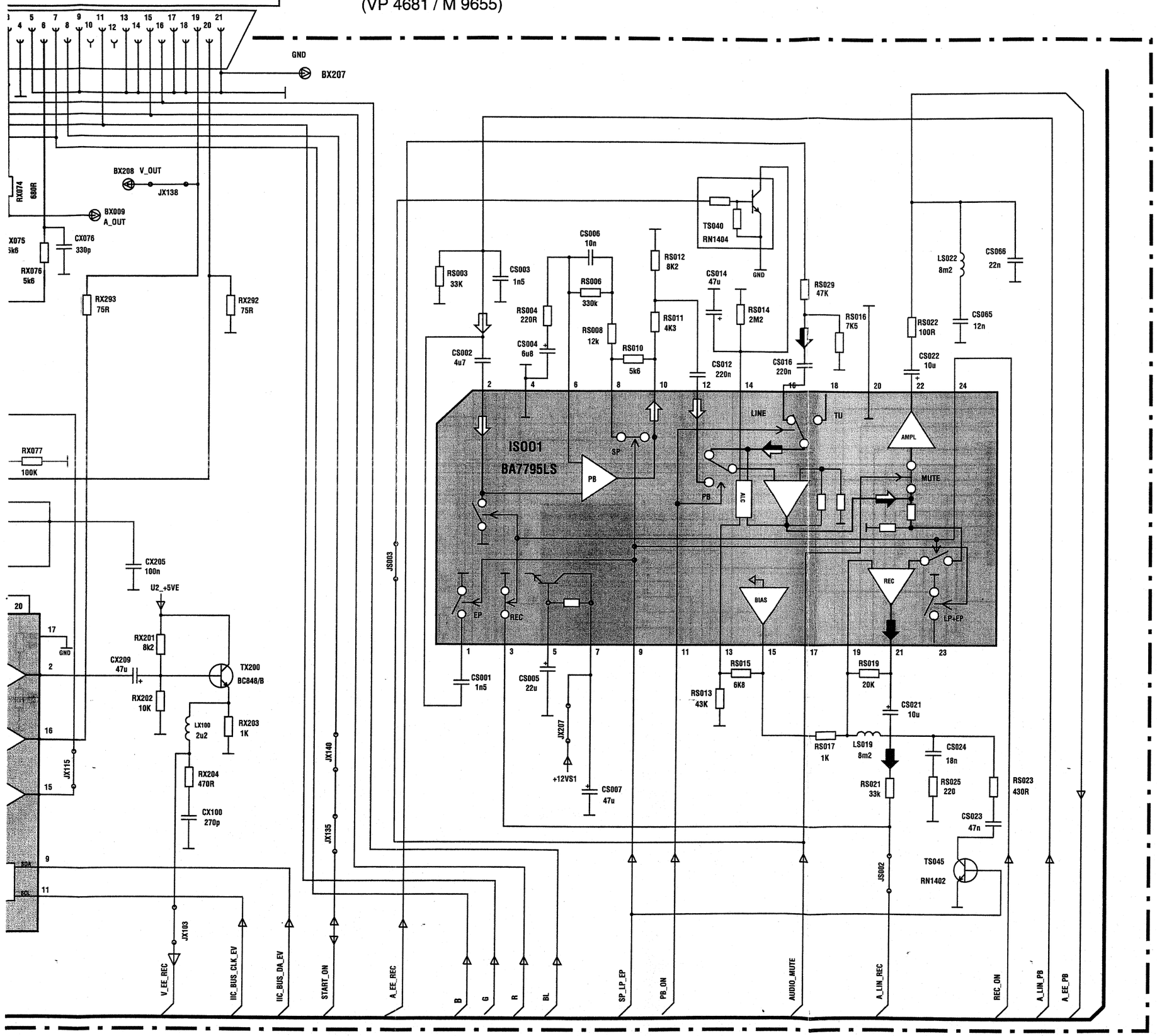

Main P.C.B. components side • Circuit imprimé de la platine principale côté composants • Hauptleiterplatte Bestückungsseite
Piastra principale lato componenti • Platina principal lado componentes (1. Version)

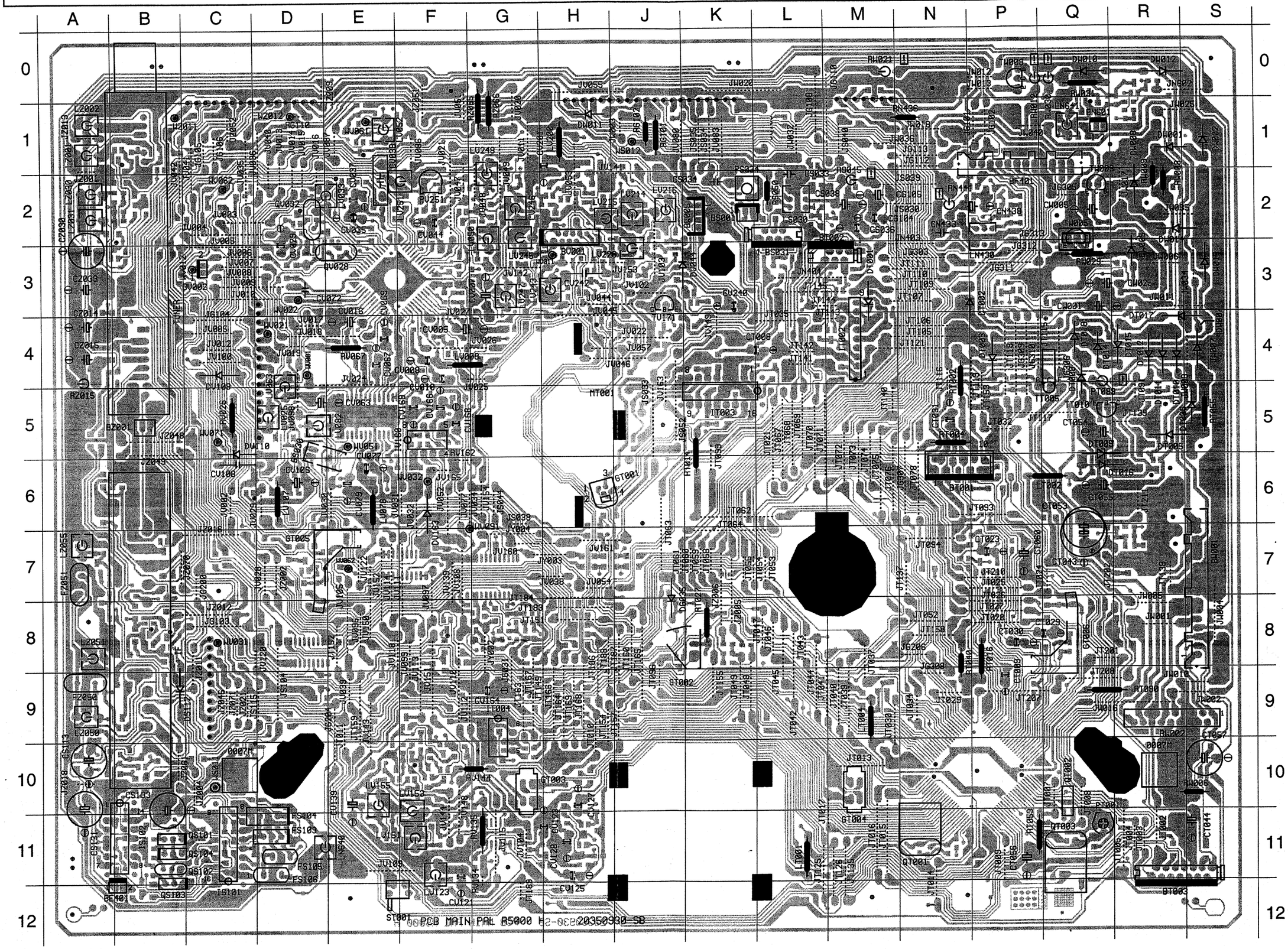

Main P.C.B. Solder side • Circuit imprimé de la platine principale côté cuivre • Hauptleiterplatte Lötseite
Piastra principale lato saldatura • Platina principal lado del cobre (1. Version)

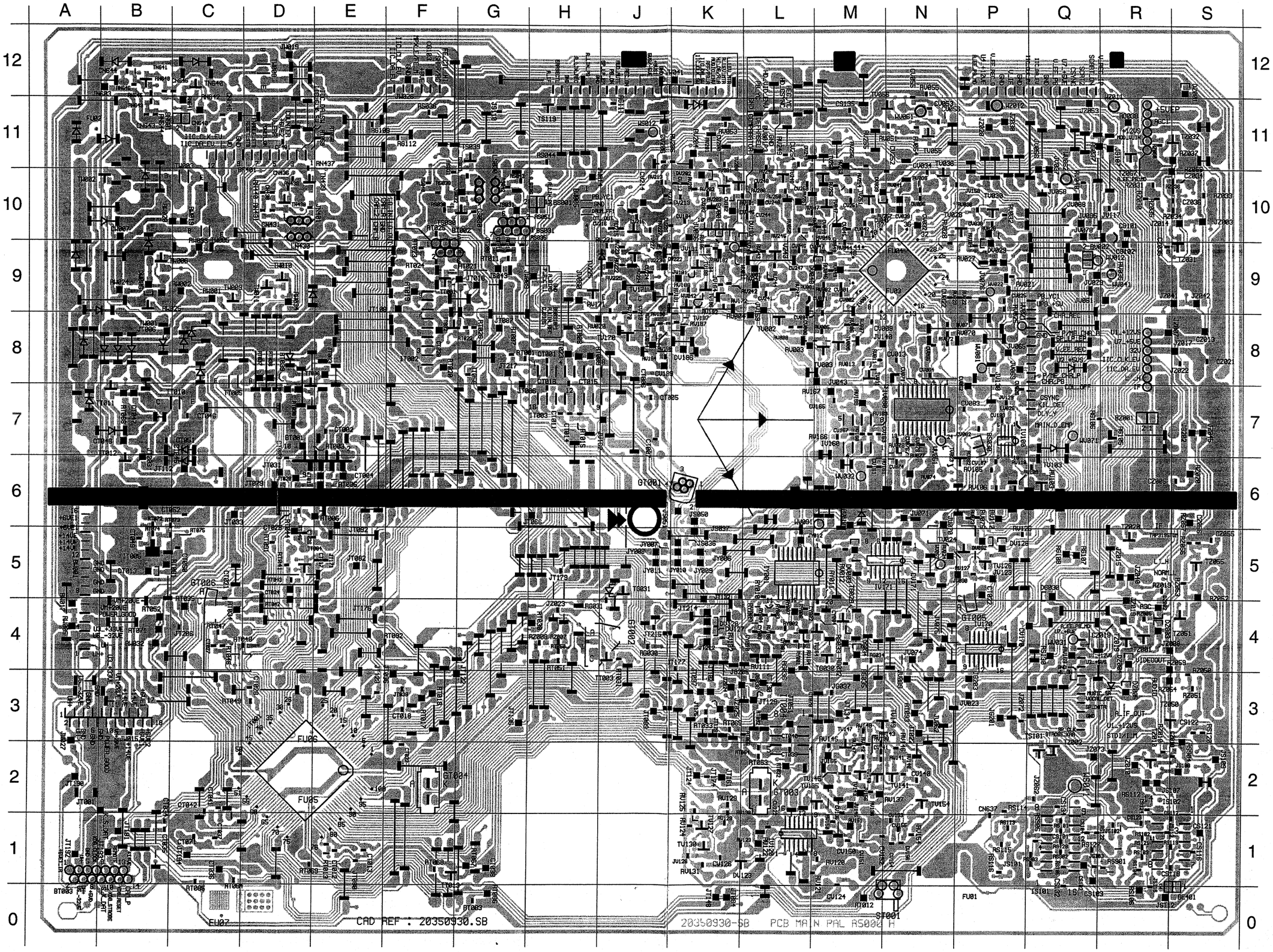

COMPONENTS LOCATION - LOCALISATION DES ELEMENTS - LAGE DER BAUTEILE
LOCALIZZAZIONE DEGLI ELEMENTI - LOCALIZACION DE LOS COMPONENTS

* SOLDER SIDE - COTE CUIVRE - LÖTSEITE - LATO SALDATURE - LADO DEL COBRE

1 2 3

BE401	B12
BE401*	S0
BF401	P2
BF401*	D10
BN601	Q1
BN601*	B11
BS001	K2
BS001*	H10
BS030	D5
BS030*	P7
BS031	L3
BS031*	H10
BT001	N6
BT001*	D7
BT002	M2
BT002*	G10
BT003	R12
BT003*	A0
BV001	H3
BV001*	K10
BV002	C3
BV002*	Q9
BW001	S7
BW001*	A5
BW002	R9
BW005	K2
BW005*	H10

CF401*	D11
CG101*	R10
CG102*	R9
CJ104	N2
CJ105	N2
CN431*	D10
CN433	N2
CN436*	D10
CN438	P2
CN438*	D10
CN637*	P2
CN640*	C11
CN643*	B11
CN644*	B12
CN645*	C12
CN646*	C11
CS030*	G10
CS031*	G11
CS033	L2
CS034	J2
CS036	M2
CS038	L2
CS101*	Q1
CS102*	Q1
CS103*	Q1
CS104*	Q1
CS112*	R2
CS113	A10
CS116*	S1
CS118*	R1
CS121*	S1
CS122*	S3
CS123*	R1
CS124*	R2
CS131	A11
CS132*	Q1
CS133	B10
CS134*	Q2
CS135*	M11
CT001*	H8
CT002*	E7
CT003*	D7
CT004*	E6
CT005*	J7
CT006*	J8
CT007*	J7
CT008	L4

CT009	P9
CT010*	G9
CT011*	H7
CT012*	E1
CT013*	E1
CT014*	H7
CT015*	H8
CT016*	H8
CT017*	E5
CT018*	F3
CT020*	F8
CT021*	C5
CT022*	P5
CT023	P7
CT024*	D5
CT025*	D6
CT026*	D5
CT027*	C4
CT028*	D3
CT029	P8
CT030	P8
CT031	N5
CT032*	F2
CT034*	C2
CT035*	C1
CT036*	C1
CT037*	C1
CT038*	G1
CT039*	L2
CT040*	L3
CT041*	C2
CT042*	C2
CT043	Q7
CT044	S11
CT045*	C7
CT046*	C7
CT047*	B7
CT048*	B7
CT049*	B5
CT050*	C5
CT051*	C7
CT052*	C6
CT053	Q6
CT054	Q5
CT055	Q6
CT056	P11
CT060	P7
CT070*	L3
CV001*	M9
CV002*	M9
CV004*	L8
CV005	F4
CV006*	L8
CV007	F3
CV008	F4
CV009*	M8
CV010	F4
CV011*	M9
CV013*	N8
CV016	E3
CV022*	N9
CV025*	P9
CV029	D2
CV030*	P10
CV032*	N10
CV034*	N10
CV035	E2
CV036*	N10
CV037	E2
CV038	E1
CV039*	N10
CV041*	M10
CV042*	M10
CV044	F2
CV045*	M10
CV046*	L9
CV047*	M9
CV048*	M10
CV049*	M9
CV050*	L10
CV051*	M11

CV052*	N11
CV053*	N11
CV054*	N12
CV055*	N12
CV062*	P8
CV063	E5
CV064*	N8
CV065*	N8
CV067	E4
CV069	E3
CV071*	N8
CV072	E3
CV074*	N6
CV076*	N7
CV077	E5
CV078*	N7
CV079	E6
CV082*	P7
CV083*	P7
CV103*	P7
CV106	D6
CV107*	P6
CV108	C6
CV121	G12
CV122*	L2
CV123	H11
CV124*	M0
CV125	H12
CV126*	K1
CV127	H10
CV128	H11
CV135*	M2
CV139	E10
CV140*	N2
CV141*	M2
CV150*	M1
CV151*	M1
CV152*	M1
CV153*	N2
CV154*	N1
CV155*	N1
CV156*	N1
CV161*	M6
CV163*	M7
CV164	G9
CV165*	M7
CV166	F5
CV167*	M7
CV168	F5
CV169	F5
CV170*	P4
CV171*	N5
CV182*	K10
CV184*	K10
CV189*	J8
CV200*	K11
CV201	G1
CV202*	K10
CV206*	J11
CV212*	K10
CV213*	K10
CV214*	J10
CV215*	J10
CV219*	J9
CV222*	K9
CV224*	J9
CV226*	J10
CV240	K3
CV241*	L9
CV242	H3
CV243*	L9
CV244*	L10
CV245*	L10
CV246*	L10
CV247*	L9
CV248*	L10
CV249*	L11
CV250*	L10
CV251*	M10
CV252*	N11
CV254*	L11

CW001	Q3
CW005	Q2
CW007*	B10
CW025	R3
CY001*	L4
CY002*	L4
CY003*	L4
CY004*	M4
CZ005*	R6
CZ010*	R3
CZ013*	S8
CZ014	A4
CZ015	A4
CZ019*	Q4
CZ021*	S8
CZ030	A3
CZ033	A3
CZ034*	S10
CZ035*	R9
CZ036*	S10
CZ055*	S5
CZ056*	S6

DG030*	Q5
DG034*	M4
DG035	J8
DS112	B9
DT001	M3
DT002	P4
DT003	P4
DT005	R5
DT006	S5
DT008	Q4
DT009	Q5
DT010	R5
DT011	R5
DT012	R4
DT013*	B5
DT014	Q4
DT015	R4
DT016	Q6
DT017	R3
DT018	Q4
DV003	F6
DV029*	P9
DV039*	M10
DV044	K3
DV048*	L9
DV082*	P5
DV109	C4
DV110	C5
DV123*	K1
DV126*	P5
DV163	F6
DV182*	L10
DV186*	K8
DV202*	K10
DW001	R1
DW002	S1
DW005	R3
DW006*	B9
DW007	S4
DW008	R1
DW010	Q0
DW011	H1
DW012	R0
DW013	S3
DW014	R2
DZ001*	S11
DZ002*	R4
DZ003*	R4
DZ004*	R4
DZ005*	R3
DZ006	G1

FS103	D11
FS104	D11
FS105	D11
FS106	D11
FU01*	P0
FU02*	A11
FU03*	N9
FU04*	N9
FU05*	D2
FU06*	D3
FU07*	C1
FZ050	A9
FZ051	A7

IS101	C12
IS101*	Q1
IS102	B11
IS102*	R2
IT001*	D3
IT002	M4
IT002*	F8
IT003	K5
IT003*	H7
IT004	G9
IT004*	L3
IT005*	B5
IV001*	M9
IV060*	M7
IV100*	P7
IV120*	L1
IV160	E5
IV160*	M7
IV170*	P4
IV171*	M5
IY001*	L5

JG031	G9
JG036*	L3
JG037*	M3
JG101	N1
JG102	P1
JG103	C8
JG104	C4
JG105	C1
JG106	C1
JG107*	R11
JG108	L1
JG109	L1
JG110	M0
JG112	N1
JG113	N1
JG200	C7
JG201*	P3
JG202*	S7
JG203*	P3
JG204	E9
JG205*	K4
JG206	N8
JG303	N3
JG305	Q2
JG306	Q4
JG307	M6
JG308	N8
JG309	P4
JG310	P4
JG311	P3
JG312	P3
JG313	P3
JN401*	E10
JN403	N2
JN404	L3
JN602	R0
JN603*	B12

JS030	N2
JS031*	G10
JS033	J5
JS034	K1
JS035	K1
JS036*	K5
JS037*	K6
JS038	G6
JS039	N2
JS040	M1
JS043*	G9
JS044	G6
JS050*	K6
JS051*	J6
JS052	J5
JS053*	H10
JS101*	P1
JS102*	R1
JS103*	Q1
JS104	D9
JS107*	R2
JS108*	S2
JS109*	S2
JS110*	G11
JS112*	R0
JS113*	R1
JS115	C9
JS116*	R1
JT001*	A2
JT002	R11
JT003	R11
JT004	R11
JT005	R11
JT006*	B8
JT007	Q10
JT008	Q10
JT009	P11
JT010	H9
JT011	E9
JT013	M10
JT014	N11
JT015	M11
JT016	M11
JT017	L11
JT018*	G9
JT019*	D6
JT020*	D6
JT021	L5
JT023*	H8
JT024	P7
JT025	P7
JT026	P7
JT027	P8
JT028	P8
JT029	N9
JT030	M9
JT031*	D6
JT032	P5
JT033*	C6
JT034	N9
JT035	L3
JT036*	F3
JT037	M8
JT038*	F3
JT039	M9
JT040	M9
JT041	L9
JT042	L9
JT043	L8
JT044	L9
JT045	L9
JT046	L8
JT047	L8
JT048	K9
JT049	K9
JT051*	L3
JT052	N8
JT053	L7
JT054	L7
JT055	K7
JT056*	G8

JT058	K7
JT059	K7
JT060	K7
JT061	J7
JT062	K6
JT063	J7
JT064	K6
JT066*	H6
JT067	L5
JT068	L5
JT069	L5
JT070	L5
JT071	L5
JT072	M6
JT073	M6
JT074	M6
JT075	M6
JT076	M6
JT078	N6
JT079*	D6
JT080*	E1
JT082*	E5
JT083*	E8
JT084*	K0
JT086*	G8
JT087*	G8
JT089*	J3
JT091	R5
JT092*	E5
JT093	P6
JT094	N7
JT096	J9
JT097*	K3
JT099	K6
JT102*	K3
JT105	N4
JT106	N4
JT107	N3
JT108*	E9
JT109	N3
JT110	N3
JT111	N3
JT112*	B6
JT115	Q4
JT116	N4
JT117	P5
JT118	P4
JT119	P5
JT121	N4
JT122*	G3
JT123*	E4
JT124*	K2
JT125	L11
JT126	M11
JT128*	K3
JT129*	L3
JT130*	L3
JT132*	K5
JT134*	M3
JT135	M11
JT136*	G3
JT137	N7
JT138	R7
JT139	R5
JT140	M5
JT141	L4
JT142	L4
JT143	L3
JT144	L3
JT145	L3
JT148*	K0
JT149	G9
JT151	G8
JT152	E8
JT153	P5
JT154	H9
JT155	K9
JT158	N8
JT159	E9
JT160	J8
JT161*	K2

JT163	G9
JT164	H9
JT165	J8
JT166	H9
JT167	G9
JT168	H9
JT169	H9
JT171*	E5
JT174*	K2
JT175*	K3
JT176*	E4
JT177*	K4
JT179*	H5
JT183	G8
JT184	G7
JT186	H9
JT187	J8
JT188	H8
JT189	G12
JT190*	A2
JT191*	B1
JT192*	A1
JT193*	B1
JT194*	C1
JT201	Q8
JT202	Q7
JT203*	B7
JT206*	C4
JT207	P9
JT208	Q9
JT209*	G9
JT210	P7
JT211	R6
JT212*	K4
JT213*	K4
JT214*	K4
JT215*	J4
JT217*	G8
JV001*	L9
JV002	C6
JV003	C2
JV004	C2
JV005	C3
JV006	C3
JV007	C3
JV008	C3
JV009	C3
JV010	C3
JV011	G1
JV012	C4
JV013	D1
JV014	D1
JV015	D1
JV016	D1
JV017	D4
JV018	D4
JV019	D4
JV020	G1
JV021	F1
JV022	J4
JV024	E4
JV025	G4
JV026	G4
JV027	F3
JV028	D7
JV029	D6
JV030	D6
JV031	E6
JV032	F6
JV034	G6
JV035	C1
JV036	C1
JV037*	Q10
JV038	H7
JV039	E9
JV040	D1
JV041	C1
JV042	B1
JV043*	M8
JV044	H3
JV045	H3

JV046	J4
JV047	F2
JV048	G2
JV049	G2
JV051	F1
JV052	F6
JV053	H2
JV054	H7
JV055	H0
JV056*	Q11
JV057	J4
JV058*	Q10
JV060*	H9
JV061*	Q9
JV062*	N3
JV065*	P8
JV066*	K10
JV068*	Q10
JV069*	P8
JV070*	N6
JV071*	N6
JV074*	N4
JV075*	N4
JV076*	P9
JV077*	M5
JV078*	Q10
JV079*	Q9
JV080	J1
JV083	K1
JV085	C4
JV086	F1
JV087	D1
JV089*	N3
JV090*	N5
JV094*	J8
JV095*	Q10
JV096	E8
JV097	F7
JV098	D5
JV099	F8
JV100	C4
JV101*	K9
JV102	J3
JV103	J3
JV104	G11
JV105	E7
JV108	F7
JV109	E11
JV110	F9
JV111	E7
JV112	F9
JV113	F8
JV114	E7
JV115	G11
JV117*	R10
JV118	E8
JV120	D8
JV122	E7
JV123*	P5
JV126*	K1
JV129*	P7
JV130*	P8
JV131*	K9
JV139	F7
JV140*	M8
JV141	H1
JV142	G3
JV143	E9
JV144	F11
JV145*	M2
JV148	F11
JV149	K4
JV150	E7
JV151	F8
JV152	E7
JV153	J3
JV154	G6
JV155*	M2
JV156*	M2
JV158*	P10
JV159*	L9
JV160	G7
JV161	H7
JV162*	H7
JV163	J5
JV165	F6
JV215	H2
JW001	R8

JW002	S9
JW003	J1
JW004	S8
JW005	R7
JW006	R3
JW007	S4
JW008	S5
JW009*	H9
JW010	R9
JW011	R3
JW012	P0
JW013	P0
JW014*	H10
JW015*	B3
JW016	Q9
JW017	R2
JW018	N1
JW019*	D12
JW020	K0
JW025	R1
JW026*	F12
JW027*	A3
JW032	L1
JW034	S3
JW035	R2
JW036	N1
JW040	P1
JW041*	K12
JY002	G8
JY003	H7
JY004	G7
JY006*	K5
JY007*	J5
JY008*	J5
JY009*	K5
JY010*	K5
JY011*	J5
JY012*	L5
JZ001	A2
JZ002	D7
JZ003*	S10
JZ004	C10
JZ005	K8
JZ006	K8
JZ007*	R8
JZ008*	R4
JZ009*	R12
JZ010*	R2
JZ011	C8
JZ012	C8
JZ014*	R10
JZ015*	R5
JZ016	C6
JZ017*	R8
JZ018	A10
JZ019*	R5
JZ020*	P11
JZ021	C9
JZ022*	S8
JZ023*	H4
JZ024*	K3
JZ025*	K3
JZ030*	P11
JZ040*	R5
JZ041*	R9
JZ042*	S9
JZ045*	S7
JZ046	C9
JZ048	B5
JZ049	B6
JZ051	F1
JZ052	C1
JZ053*	Q11
JZ061	B10
JZ062*	Q2
JZ070	B7
JZ071	C9
JZ072*	P3
JZ073*	Q2

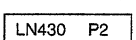

LN430	P2
LN430*	D9
LN640	E11
LN641	Q1
LS030	L2
LS030*	G11

LT001	L11
LT002	Q6
LT004	M9
LV008	F4
LV023*	P3
LV033	E2
LV050	G2
LV052	E1
LV053	E1
LV063	D4
LV078	E6
LV082	E5
LV107	D6
LV123	F12
LV151	E11
LV153	F10
LV155	E10
LV162	F5
LV200	H1
LV214	J2
LV216	J2
LV226	H3
LV243	G3
LV245	G3
LV246	G2
LV247	G3
LV248	G1
LV251	F2
LZ001	A1
LZ002	A1
LZ030	A2
LZ031	A2
LZ050	A9
LZ051	A8
LZ055	A7

PS034	K1
PT001	Q10
PV251	F2

QS101	B11
QS102	B11
QS103	B12
QS104	B11
QT001	N11
QT002	Q10
QT003	Q11
QV028	E3
QV032	D2

RG030*	J4
RG031*	J5
RG032*	M4
RG033*	M4
RG034*	M4
RG035*	M3
RG036*	L3
RG037*	Q11
RG038*	R11
RG101	J1
RG102	J1
RG105*	R7
RG106*	Q7
RG107*	Q5
RG108*	Q5
RG109*	E11
RG111*	J11
RG112*	F11
RN431*	D10
RN436	N1
RN437*	E11
RN439*	D10
RN440*	D10
RN441	N2
RN640*	B12
RN641*	C11
RN642*	C11
RN643*	B11
RN644*	B11
RN645*	B12

RN646*	B12
RS030*	F10
RS031*	F10
RS035*	H10
RS036*	F11
RS039*	F10
RS040*	F10
RS042*	G10
RS043*	G10
RS044*	H11
RS045	M1
RS050	L2
RS051*	H10
RS101*	Q1
RS102*	R1
RS103*	R1
RS104*	R1
RS105*	Q1
RS106*	R1
RS112*	R2
RS113*	P1
RS114*	P2
RS115*	P1
RS116*	P1
RS119*	R1
RS120*	S3
RS121*	R1
RS122*	Q1
RS127*	Q1
RS128*	Q1
RS130*	Q4
RS901*	R1
RS904*	S2
RS905*	Q2
RS982*	Q1
RS983*	Q1
RT001*	G8
RT002	N4
RT002*	L3
RT003*	E7
RT004	N5
RT005*	E6
RT006*	E6
RT007*	G8
RT008*	H8
RT009*	H8
RT010*	G9
RT011*	G9
RT012*	M0
RT013*	E1
RT014	K6
RT015*	H7
RT016	P8
RT017*	F3
RT018*	F3
RT019*	F9
RT020*	F8
RT021*	G9
RT022*	G8
RT023*	F9
RT024*	F9
RT025*	F10
RT026*	G8
RT027	K8
RT030*	H4
RT031*	J3
RT032*	L2
RT033*	K3
RT034*	C4
RT035*	C5
RT036*	D8
RT037*	D8
RT038*	D7
RT039*	D8
RT040	N8
RT041*	D5
RT042*	D4
RT043*	D5
RT044*	D5
RT045*	D5
RT046*	C4
RT047*	C4
RT048*	C4
RT049*	C3
RT050*	H4
RT051*	H4
RT052*	B4
RT053	P11

RT055	S5
RT058*	E11
RT059*	E11
RT063*	L2
RT064*	L2
RT065*	K3
RT067*	G1
RT068*	F1
RT069*	D1
RT071*	B4
RT072*	B6
RT073*	B6
RT074*	B6
RT075*	C5
RT081*	C5
RT082*	L3
RT083*	G0
RT084*	C1
RT085*	C1
RT086*	G0
RT088*	B7
RT089	Q5
RT090	R9
RT091*	D5
RV001*	L9
RV002*	M9
RV003*	L8
RV004*	K8
RV005*	M8
RV006*	M8
RV007*	M8
RV008*	L8
RV010*	M6
RV011*	M8
RV020*	H8
RV021*	P9
RV022*	P9
RV023*	N9
RV024*	N5
RV025*	P9
RV026	C5
RV027*	P9
RV028*	N10
RV029*	P10
RV030*	P10
RV032*	P10
RV035*	R9
RV036*	N10
RV041*	N10
RV044*	M9
RV045*	M9
RV046*	M9
RV047*	L10
RV048*	Q10
RV049*	M9
RV050*	L10
RV051*	N11
RV052*	M12
RV053*	K11
RV054*	N11
RV055*	N12
RV056*	N11
RV067	E4
RV070*	P8
RV071*	P8
RV072*	N8
RV073*	P6
RV074*	N6
RV075*	P6
RV076*	N7
RV077*	N7
RV104*	P9
RV105*	P6
RV106*	P6
RV109*	P6
RV110*	P6
RV111*	L4
RV112*	P6
RV120*	M1
RV121*	L1
RV122*	L1
RV123*	K1
RV124*	K1
RV125*	K2
RV126*	P6
RV127*	P5
RV128*	K1
RV129*	K2

RV130*	L2
RV131*	K1
RV135	G11
RV137*	N2
RV138*	M2
RV139*	M3
RV140*	N2
RV141*	N2
RV142*	M2
RV143*	M2
RV144	G10
RV145*	M3
RV146*	N2
RV147*	M2
RV148*	M3
RV150*	M1
RV151*	M1
RV154*	N1
RV160*	M7
RV161*	M6
RV163*	M7
RV164*	L4
RV165*	L4
RV166*	M7
RV167*	M7
RV168*	M7
RV169*	Q4
RV170*	J9
RV171*	H9
RV181*	L10
RV182*	K9
RV183*	J9
RV184*	K9
RV185*	K9
RV186*	J8
RV187*	K8
RV188*	K9
RV189*	J8
RV190*	J8
RV191*	K9
RV192*	K9
RV194*	J8
RV200*	L10
RV201*	K11
RV202*	K10
RV203*	K10
RV204*	K11
RV206*	K11
RV213*	J10
RV214*	J10
RV215*	J10
RV221*	J9
RV222*	J9
RV223*	J9
RV224*	J9
RV225*	J9
RV227*	J10
RV241*	L9
RV242*	K9
RV243*	L9
RV244*	L9
RV245*	L10
RV247*	L9
RV248*	L10
RV249*	L11
RV250*	L10
RV251*	L10
RV252*	M11
RV253*	M10
RV254*	M10
RV255*	M11
RV256*	M11
RV257*	M10
RV285*	K10
RW001*	D9
RW002*	C9
RW005*	A4
RW006	S10
RW008	R2
RW009	R2
RW012	P1
RW017*	A5
RW019*	C10
RW020*	B10
RW021	M0
RW024*	B9
RW025*	B9
RW029	Q3

RW030	Q1
RW031	Q0
RW032*	B4
RW033*	C9
RY001*	L4
RY002*	L4
RY003*	L4
RY004*	L4
RY006*	L4
RY007*	L4
RY009*	L4
RY010*	L5
RY011*	M5
RZ002*	P11
RZ003*	P11
RZ005*	R4
RZ007*	H4
RZ008*	H4
RZ010*	R3
RZ015	A4
RZ019*	R5
RZ020*	S6
RZ030*	R10
RZ031*	R10
RZ033*	S10
RZ034*	R10
RZ035*	R10
RZ036*	R10
RZ037*	S11
RZ050*	S3
RZ051*	S3
RZ052*	S5
RZ053*	S5
RZ054*	R3
RZ055*	S10
RZ056*	S5
RZ057*	S6
RZ059*	R4
RZ060*	R11
RZ065	G1
RZ066	G1

ST001	E12
ST001*	N0

GT001	J6
GT001*	J6
GT002	J9
GT002*	J4
GT003	H10
GT003*	L2
GT004*	F2
GT005	D7
GT005*	P4
GT006	Q8
GT006*	C5
TG029*	M5
TG030*	M4
TG031*	J5
TN438*	D10
TN439*	E10
TN640*	C12
TN641*	B12
TS030*	F10
TS039*	G11
TS101*	Q3
TS119*	H11
TT001*	F9
TT002*	F8
TT003*	J3
TT004*	D5
TT005	P5
TT005*	C7
TT006*	D8
TT010	Q5
TT010*	C7
TT011*	B7
TT012*	B7
TT013*	F1
TV002*	L8
TV003*	M8

TV006*	M8
TV011*	M8
TV024*	N5
TV028*	N10
TV030*	P10
TV036*	N11
TV047*	M10
TV055*	N11
TV103*	Q6
TV126*	P5
TV127*	K1
TV130*	K1
TV135*	M2
TV140*	M2
TV141*	N2
TV143*	M2
TV145*	M2
TV147*	M3
TV149*	N3
TV154*	N2
TV164*	M4
TV170*	J8
TV171	J3
TV171*	J9
TV186*	K9
TV187*	K8
TV188*	K9
TV200*	K11
TV201*	K11
TV223*	J9
TV225*	H9
TV227*	J10
TV243*	L9
TV248*	L10
TV250*	M11
TV251*	M10
TW001*	B8
TW002*	A10
TW003	Q1
TW003*	C10
TW005	Q2
TW005*	C9
TW006*	B9
TW008	P0
TW008*	D12
TW009*	C9
TZ001*	R4
TZ002*	Q3
TZ010*	R2
TZ019*	R4
TZ020*	R6
TZ031*	S9
TZ032*	R11
TZ033	G0
TZ033*	L12
TZ050*	R3
TZ051*	S4
TZ055*	S5
TZ057*	R10

WF011*	F11
WF012*	E9
WF012	P3
WS011	C10
WS011*	Q2
WS012	J1
WS012*	J11
WT011*	G1
WT012	Q11
WT012*	C1
WV011	G3
WV011*	K9
WV012	C3
WV012*	R9
WV021	D4
WV021*	P9
WV022	D3
WV022*	P9
WV031	C8
WV031*	Q4
WV032	F6
WV032*	M6
WV052*	N5
WV131*	J5
WV141*	K9
WV142*	L8

Main P.C.B. components side • Circuit imprimé de la platine principale côté composants • Hauptleiterplatte Bestückungsseite
Piastra principale lato componenti • Platina principal lado componentes (2. Version)

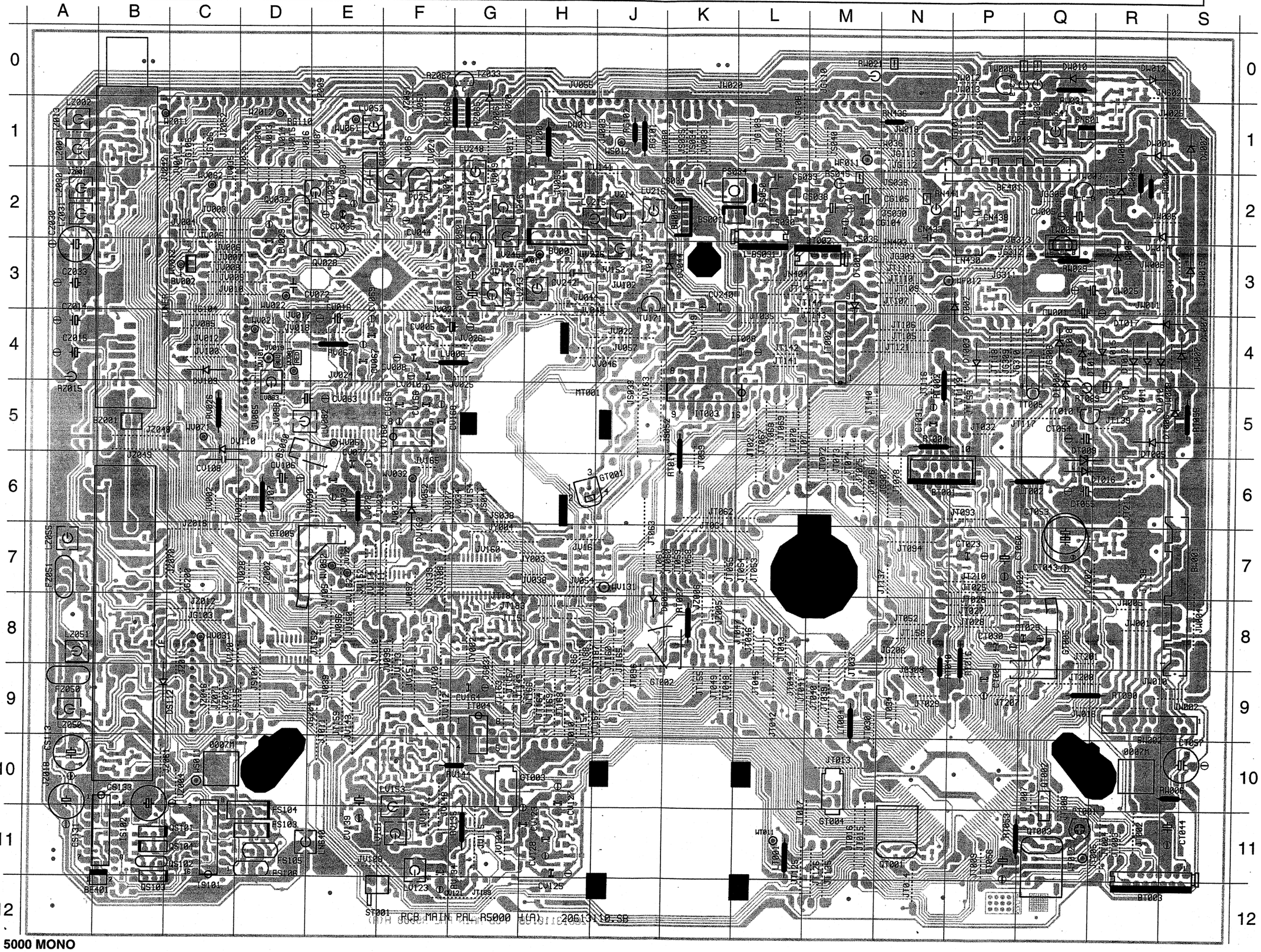

Main P.C.B. Solder side • Circuit imprimé de la platine principale côté cuivre • Hauptleiterplatte Lötseite
Piastra principale lato saldature • Platina principal lado del cobre (2. Version)

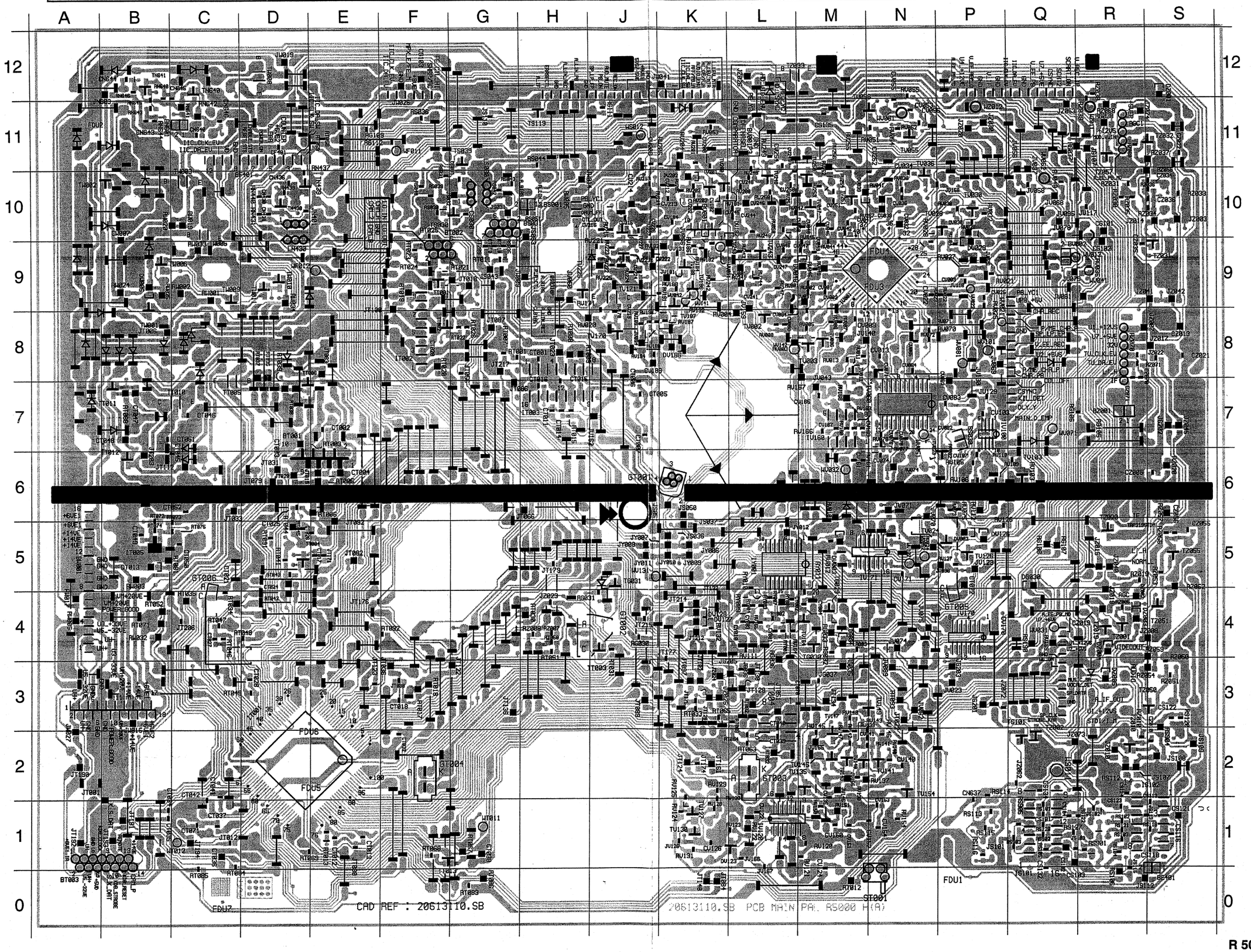

MECHA DECK CONTROL / SERVO CONTROL - GESTION / ASSERVISSEMENTS - MECHANIKSTEUERUNG / SERVO - CONTROLLO MECCANISMO / ASSERVIMENTI - SERVOMECANISMO / GESTIÓN

BLOCK DIAGRAM - SCHEMA SYNOPTIQUE - BLOCKSCHALTBILD - SCHEMA A BLOCCHI - ESQUEMA DE BLOQUES

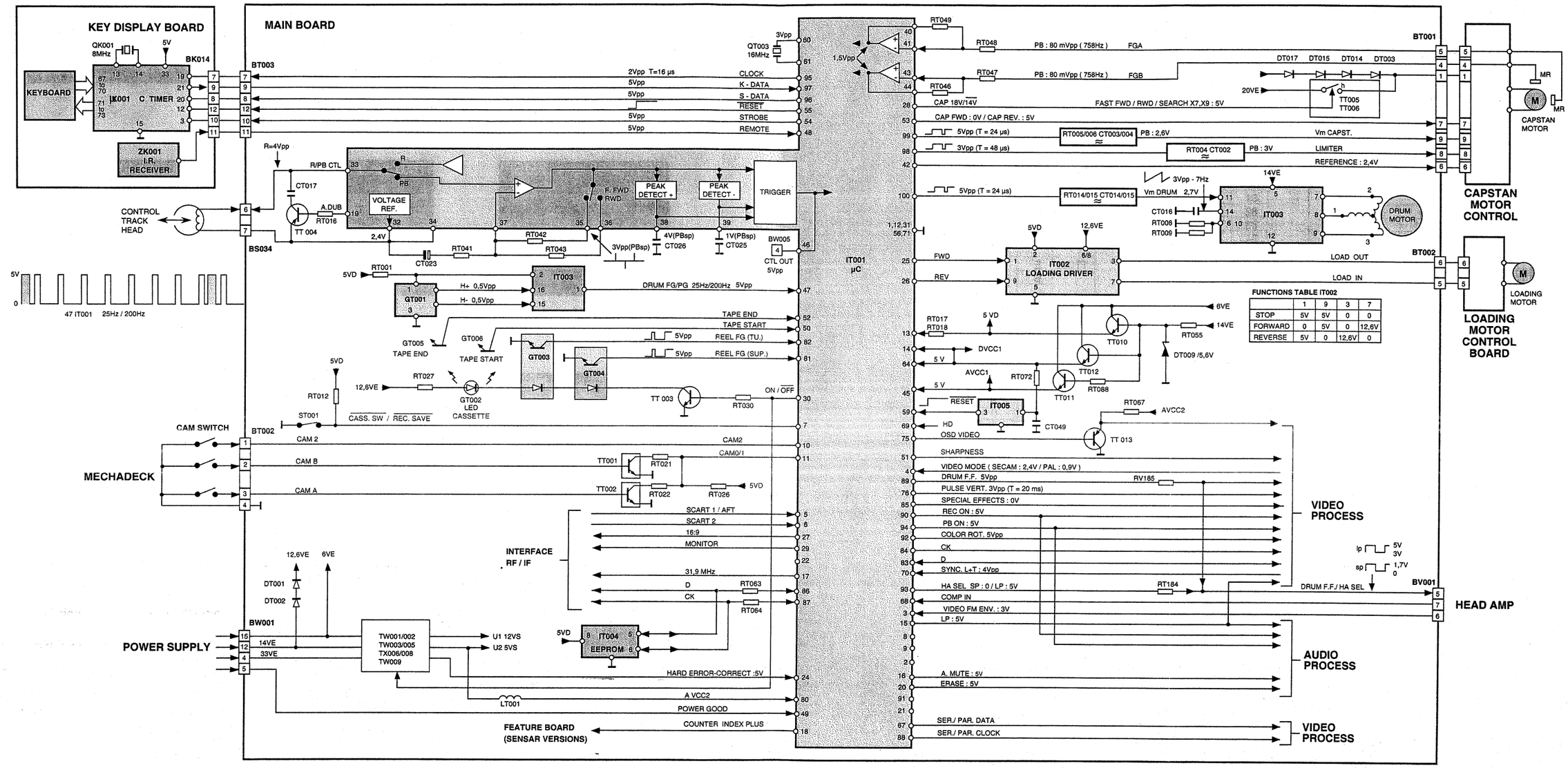

FUNCTIONS TABLE IT002				
	1	9	3	7
STOP	5V	5V	0	0
FORWARD	0	5V	0	12,6V
REVERSE	5V	0	12,6V	0

MEASUREMENTS MECHA DECK CONTROL / SERVO CONTROL - MESURES GESTION / ASSERVISSEMENTS - MESSUNGEN MECHANIKSTEUERUNG / SERVO - MISURE CONTROLLO MECCANISMO / ASSERVIMENTI - MEDIDAS SERVOMECANISMO / GESTIÓN

SERVO		MODE	
LOC	PIN	PLAY	REC.
IT001	1	0	0
	2	0.4	2.3
	3	2,1	0
	4	3.4	0
	5	1.9	0
	6	0	0
	7	0	4.9
	8	0	3.7
	9	0.1	3.7
	10	0	0
	11	2	2
	12	0	0
	13	4.9	4.9
	14	4.8	4.8
	15	0	2.1
	16	0	0
	17	0	0
	18	0	0
	19	4.8	0
	20	0	0
	21	4.4	0
	22	5.1	0
	23	4.8	0
	24	4.9	4.9
	25	4.8	4.8
	26	4.8	4.8
	27	0	0
	28	0	0
	29	4.7	0
	30	4.6	0
	31	0	0
	32	2.4	2.4
	33	2.4	2.8
	34	2.4	2.4
	35	2.4	2.4
	36	2.4	2.4
	37	2.4	2.4
	38	3.8	2.4
	39	0.9	2.2
	40	2.4	2.4
	41	2.4	2.4
	42	2.4	2.4
	43	2.4	2.4
	44	0	2.4
	45	4.8	4.8
	46	4.8	4.8
	47	1.2	1.2
	48	4.9	4.9
	49	5	0
	50	4.9	4.8
	51	1.8	1.6
	52	4.9	5
	53	0	0
	54	4	2.1
	55	4.8	4.8
	56	0	0
	57	2.1	3.3
	58	2.5	2.5
	59	4.8	4.8
	60	2.3	2.3
	61	2	2
	62	4.8	4.8
	63	2.2	0.5
	64	4.8	4.8

SERVO		MODE	
LOC	PIN	PLAY	REC.
	65	0	0
	66	0	0
	67	0	0
	68	4.7	0
	69	4.7	4.7
	70	0.7	0.7
	71	0	0
	72	0	0
	73	0.8	0
	74	0	0
	75	1.3	1.3
	76	1.8	1.8
	77	1.5	0.2
	78	2.2	2.2
	79	2.2	2.2
	80	5.1	5.1
	81	-	-
	82	-	-
	83	4.9	4.9
	84	4.9	4.9
	85	4.8	4.8
	86	4.5	4.5
	87	4.6	4.6
	88	4.8	4.8
	89	2.3	2.3
	90	0	4.8
	91	2.4	2.4
	92	2.4	2.4
	93	4.7	0
	94	4.7	0
	95	4.3	4.3
	96	2.6	2.6
	97	4.3	4.3
	98	1.5	1.5
	99	2.5	2.5
	100	2.7	2.7
IT002	1	4.6	4.6
	2	4.9	4.9
	3	0.5	0.5
	4	-	-
	5	0	0
	6	12.4	12.4
	7	0.5	0.5
	8	12.4	12.4
	9	4.6	4.6
IT003	1	1.3	1.3
	2	1.4	1.4
	3	0	0
	4	0	0
	5	13.1	13.1
	6	0	0
	7	10	10
	8	10	10
	9	10	10
	10	0	0
	11	2.7	2.7
	12	0	0
	13	5	5
	14	3.2	3.2
	15	0.6	0.6
	16	0.8	0.8

SERVO		MODE	
LOC	PIN	PLAY	REC.
IT004	1	0	0
	2	0	0
	3	0	0
	4	0	0
	5	4.5	4.5
	6	4.7	4.7
	7	0	0
	8	4.9	4.9
IT005	1	4.8	4.8
	2	0	0
	3	4.8	4.8
TT001	E	0	0
	B	4.5	4.5
	C	0	0
TT002	E	0	0
	B	4.5	4.5
	C	0	0
TT003	E	0	0
	B	0.7	0.7
	C	0	0
TT004	E	2.3	2.3
	B	4.8	4.8
	C	0	0
TT005	E	23.3	23.3
	B	22.7	22.7
	C	10.7	10.7
TT006	E	0	0
	B	0	0
	C	22	22
TT010	E	4.9	4.9
	B	5.6	5.6
	C	5.8	5.8
TT011	E	4.8	4.8
	B	5.5	5.5
	C	5.7	5.7
TT012	E	4.8	4.8
	B	5.6	5.6
	C	5.7	5.7
TT013	E	2	2
	B	1.3	1.3
	C	0	0

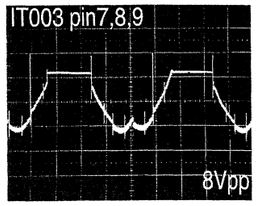

1

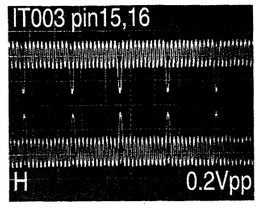

2

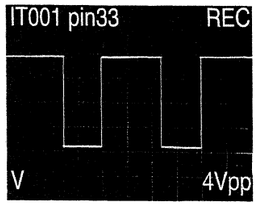

3

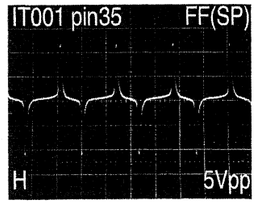

4

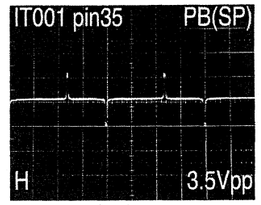

4

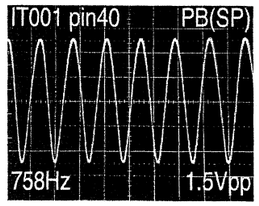

5

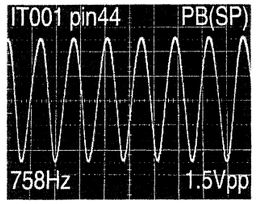

6

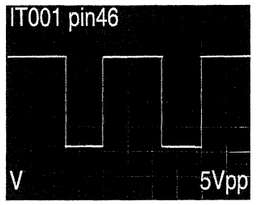

7

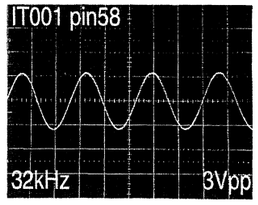

8

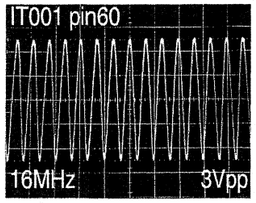

9

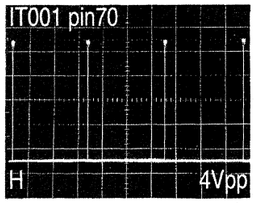

10

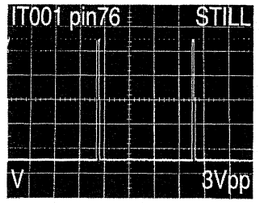

11

MECHA DECK CONTROL / SERVO CONTROL - GESTION / ASSERVISSEMENTS - MECHANIKSTEUERUNG / SERVO - CONTROLLO MECCANISMO / ASSERVIMENTI - SER

SCHEMATIC DIAGRAM - SCHEMA DE PRINCIPE - SCHALTBILD - SCHEMA - ESQUEMA

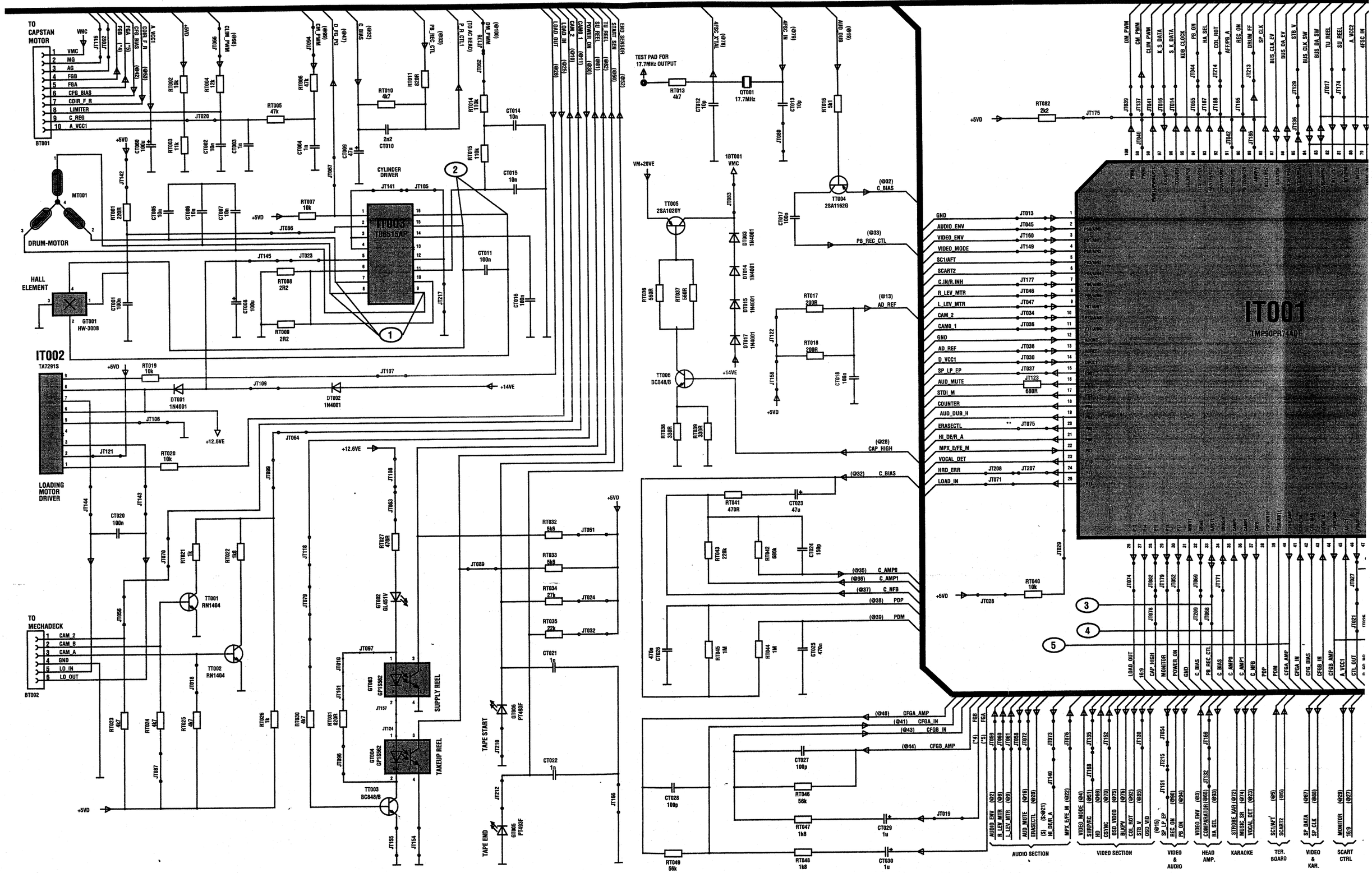

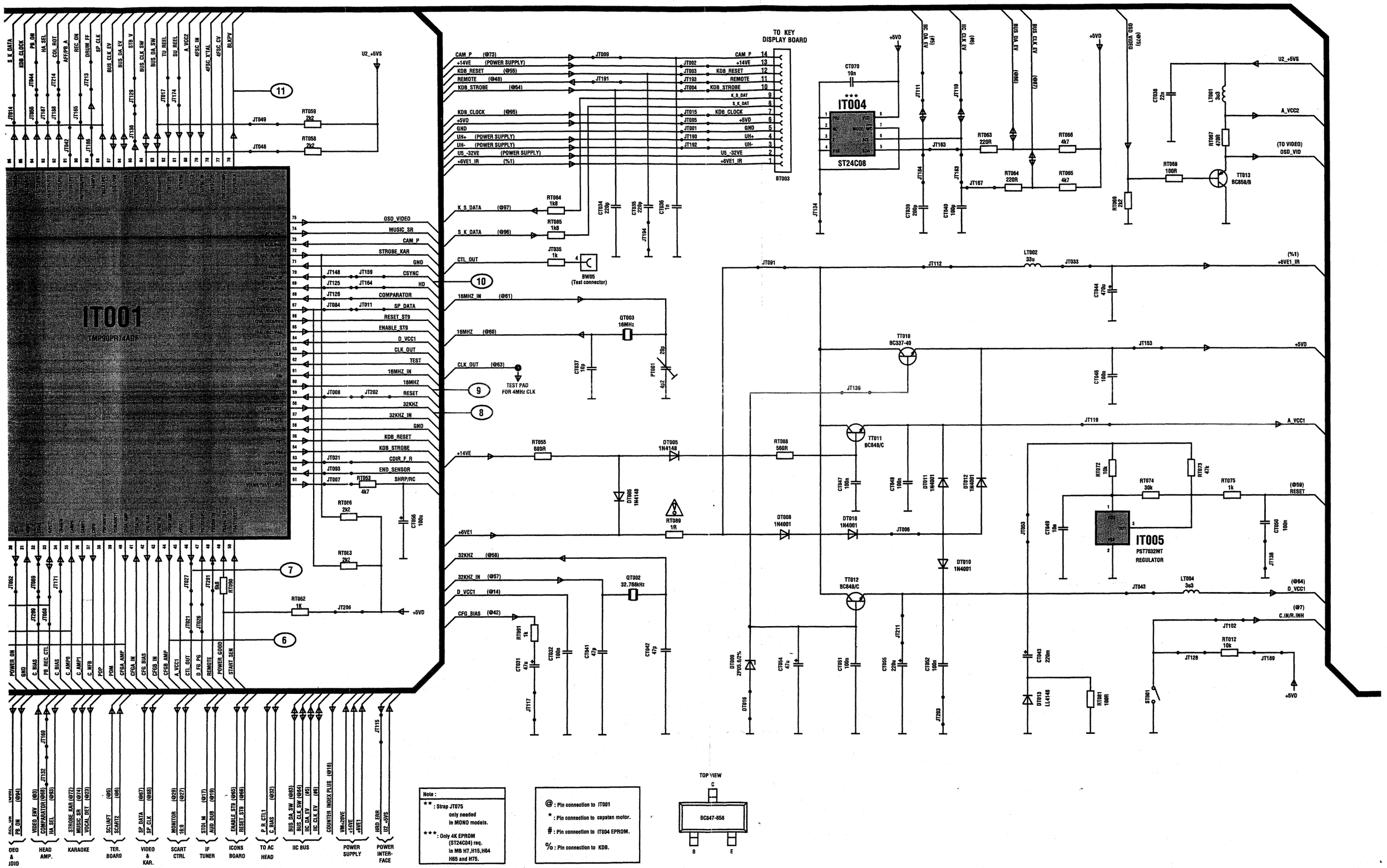
IT001
TMP90PH74ADF
IT004
ST24C08
IT005
PST7032MT
REGULATOR
TO KEY DISPLAY BOARD
BT003
BW05 (Test connector)
TEST PAD FOR 4MHz CLK
TOP VIEW
BC847-858
Note :
** : Strap JT075 only needed in MONO models.
*** : Only 4K EPROM (ST24C04) req. in MB H7,H15,H64 H65 and H75.
@ : Pin connection to IT001
* : Pin connection to capstan motor.
# : Pin connection to IT004 EPROM.
% : Pin connection to KDB.
DEQ & JDIO
HEAD AMP.
KARAOKE
TER. BOARD
VIDEO & KAR.
SCART CTRL
IF TUNER
ICONS BOARD
TO AC HEAD
IIC BUS
POWER SUPPLY
POWER INTER-FACE

VIDEO SIGNAL PROCESSING - TRAITEMENT LUMINANCE / CHROMINANCE - VIDEO SIGNALVERARBEITUNG - ELABORAZIONE VIDEO - TRATAMIENTO VIDEO

BLOCK DIAGRAM VIDEO SIGNAL PROCESSING - SCHEMA SYNOPTIQUE TRAITEMENT VIDEO - BLOCKSCHALTBILD VIDEO SIGNALVERARBEITUNG -
SCHEMA A BLOCCHI ELABORAZIONE VIDEO - ESQUEMA DE BLOQUES TRATAMIENTO VIDEO

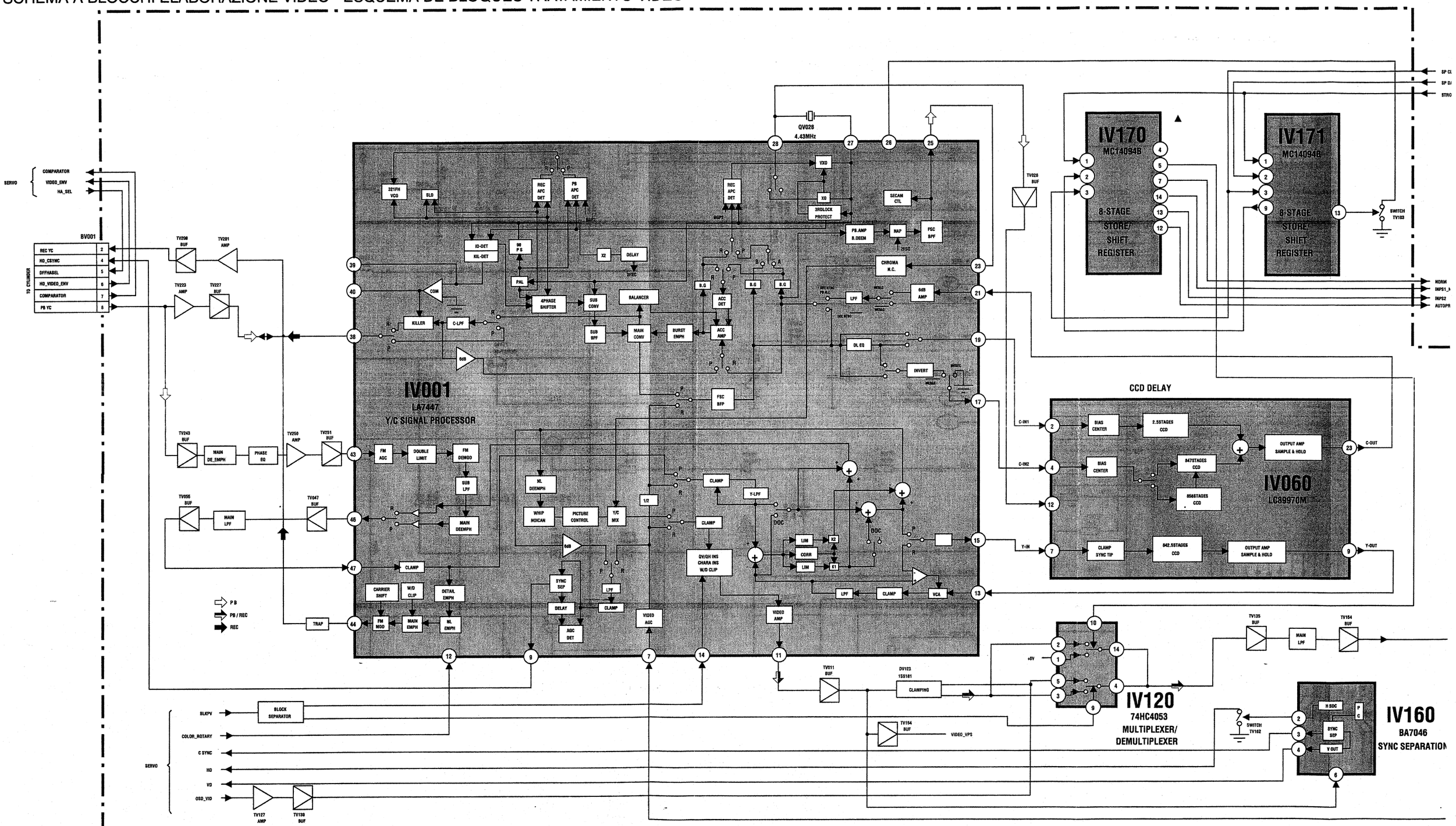

MEASUREMENTS VIDEO SIGNAL PROCESSING - MESURES TRAITEMENT VIDEO - MESSUNGEN VIDEO SIGNALVERARBEITUNG
MISURE ELABORAZIONE VIDEO - MEDIDAS TRATAMIENTO VIDEO

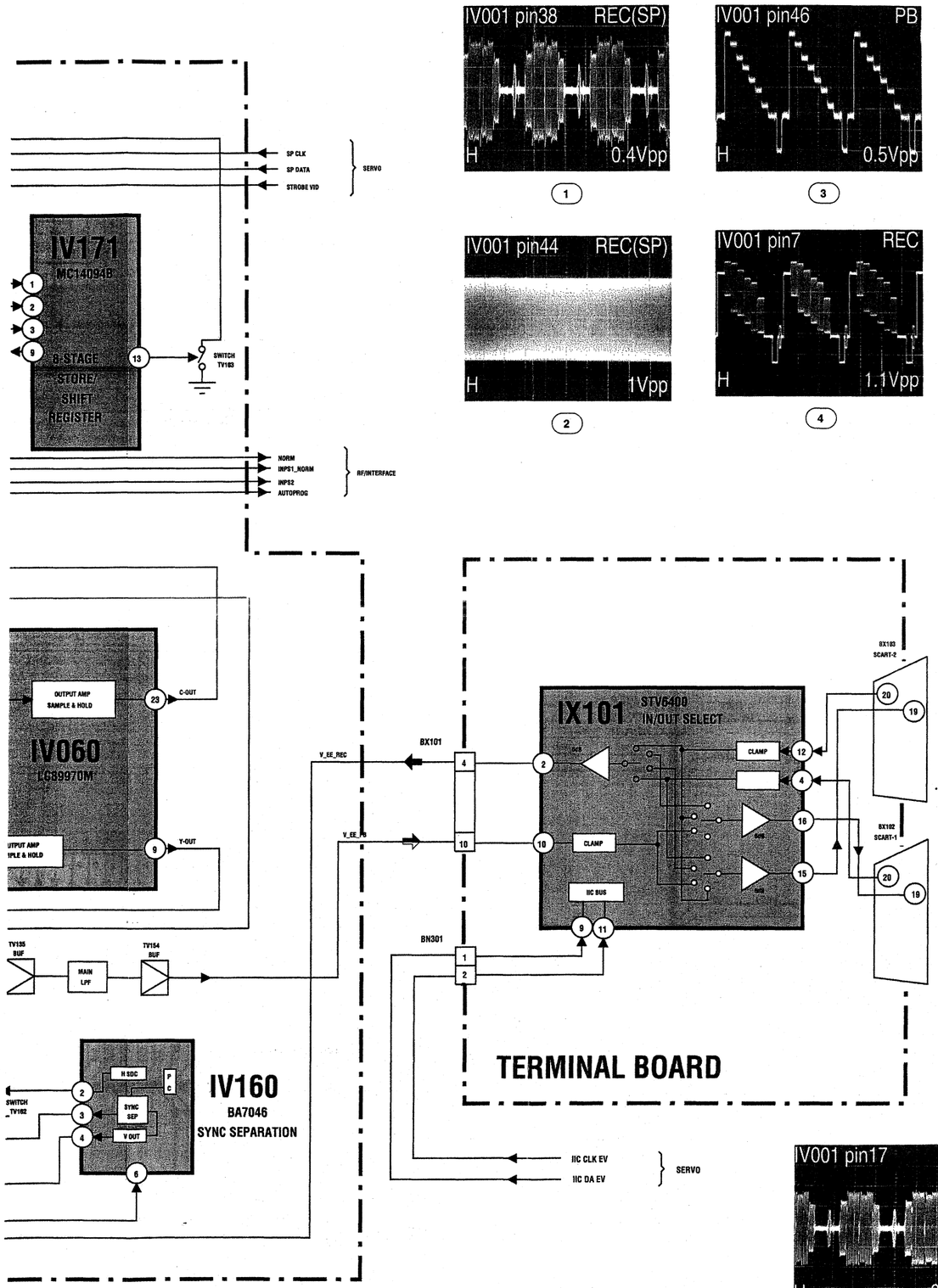

1

3

2

4

VIDEO		MODE		
LOC	PIN	EE	PLAY	REC.
DV123	1	3.1	3.1	3.1
	2	2.6	2.6	2.6
	3	2.6	2.6	2.6
IV001	1	2.3	4.5	2.3
	2	3.1	3.1	3.1
	3	2.5	2.5	2.5
	4	1.5	2	1.5
	5	2.4	2.4	2.4
	6	2.8	2.8	4.2
	7	3	3	3
	8	5	5	5
	9	0.5	0.5	0.5
	10	3.1	3.1	3.1
	11	2	2.1	2
	12	2.4	2.4	2.4
	13	2.2	2.2	2.2
	14	0.2	0.2	0.2
	15	1.2	1.2	1.2
	16	2.3	2.2	2.3
	17	2.5	2.5	2.5
	18	0	0	0
	19	2.6	2.6	2.6
	20	0	0	0
	21	2.5	2.5	2.5
	22	0	0	0
	23	1.9	1.9	1.9
	24	0	0	0
	25	0	2.5	0
	26	0.2	0.2	0.2
	27	4	4	4
	28	2.8	2.8	2.8
	29	2.1	2.1	2.1
	30	0	0	0
	31	0	0	0
	32	0	0	0
	33	5	5	5
	34	0.6	0.6	0.6
	35	0	0.3	0
	36	2.9	2.9	2.9
	37	2.9	2.9	2.9
	38	2.3	3.2	2.3
	39	3	3	3
	40	3.7	3.7	3.7
	41	1.5	2	1.6
	42	0	0	0
	43	2.3	3.2	2.3
	44	3	3.6	3
	45	4.2	4.2	4.2
	46	2.3	3.2	2.3
	47	3	3.2	3
	48	2.3	4.5	2.3

VIDEO		MODE		
LOC	PIN	EE	PLAY	REC.
IV060	1	0	0	0
	2	2.3	2.3	2.3
	3	5.1	5.1	5.1
	4	2.3	2.3	2.3
	5	0	0	0
	6	0	0	0
	7	2.3	2.3	2.3
	8	0	0	0
	9	1.2	1.2	1.2
	10	0	0	0
	11	2.3	2.3	2.3
	12	1.2	1.2	1.2
	13	0	0	0
	14	2	2	2
	15	2	2	2
	16	5	5	5
	17	0	0	0
	18	5	5	5
	19	8.5	8.5	8.5
	20	4.3	4.3	4.3
	21	0	0	0
	22	0	0	0
	23	1.3	1.3	1.3
	24	0	0	0
IV120	1	5.1	5.1	5.1
	2	3.1	3.1	3.1
	3	3.1	2.9	3.1
	4	3.1	2.9	3.1
	5	2.7	2.7	2.7
	6	0	0	0
	7	0	0	0
	8	0	0	0
	9	5.1	5.1	5.1
	10	0	0	0
	11	0	0	0
	12	3.1	2.9	3.1
	13	0.1	0.1	0.1
	14	3.1	2.9	3.1
	15	3.1	2.9	3.1
	16	5.1	5.1	5.1
IV160	1	2.1	2.1	2.1
	2	4.7	4.7	4.7
	3	0.8	0.8	0.8
	4	5	5	5
	5	0	0	0
	6	2.4	2.2	2.4
	7	5.1	5.1	5.1
	8	2.2	2.2	2.2

VIDEO		MODE		
LOC	PIN	EE	PLAY	REC.
IV170	1	4.8	4.8	4.8
	2	0	0	0
	3	4.8	4.8	4.8
	4	0	0	0
	5	0	0	0
	6	0	0	0
	7	0	0	0
	8	0	0	0
	9	0	0	0
	10	0	0	0
	11	0	0	0
	12	0	0	0
	13	0	0	0
	14	4.9	4.9	4.9
	15	5.1	5.1	5.1
	16	5.1	5.1	5.1
IV171	1	4.8	4.8	4.8
	2	0	0	0
	3	4.8	4.8	4.8
	4	0	0	0
	5	0	0	0
	6	0	5	0
	7	0	0	0
	8	0	0	0
	9	0	0	0
	10	0	0	0
	11	0	0	0
	12	0	0	0
	13	4.9	4.9	4.9
	14	0	0	0
	15	5.1	5.1	5.1
	16	5.1	5.1	5.1
TV002	E	0	0	0
	B	0	5	0
	C	0	0	0
TV003	E	1.6	2.5	1.6
	B	0	3.2	0
	C	2.5	2.5	2.5
TV006	E	2.7	2.7	4.2
	B	0	0	4.8
	C	5.1	5.1	5.1
TV011	E	2.7	2.7	2.7
	B	2	2	2
	C	0	0	0
TV028	E	2.2	2	2.2
	B	2.8	2.7	2.8
	C	5	5	5
TV047	E	3	3.8	3
	B	2.3	3.2	2.3
	C	0	0	0
TV055	E	2.3	3.2	2.3
	B	3	3.8	3
	C	5.1	5.1	5.1
TV103	E	0	0	0
	B	4.9	4.9	4.9
	C	0	0	0
TV126	E	0	0	0
	B	2.3	2.3	2.3
	C	-0.1	0	0
TV127	E	4.3	4.3	4.3
	B	3.7	3.7	3.7
	C	2.4	2.4	2.4
TV130	E	1.7	1.7	1.7
	B	2.4	2.4	2.4
	C	5.1	5.1	5.1
TV135	E	2.4	2.1	2.4
	B	3	2.7	3
	C	5.1	5.1	5.1
TV140	E	1.6	1.6	1.6
	B	1	1	1
	C	5	5	5

VIDEO		MODE		
LOC	PIN	EE	PLAY	REC.
TV141	E	1.6	1.6	1.6
	B	2.3	2.3	2.3
	C	5.1	5.1	5.1
TV143	E	2.4	2.4	2.4
	B	1.8	1.8	1.8
	C	0	0	0
TV145	E	3.3	3.3	3.3
	B	2.4	2.4	2.4
	C	5.1	5.1	5.1
TV147	E	3.3	3.3	3.3
	B	4	4	4
	C	3.4	3.4	3.4
TV149	E	3.4	3.4	3.4
	B	4	4	4
	C	0.2	0.2	0.2
TV154	E	1.8	1.6	1.8
	B	2.4	2.2	2.4
	C	5.1	5.1	5.1
TV164	E	0.2	0.2	0.2
	B	2.7	2.7	2.7
	C	0.2	0.2	0.2
TV170	E	0	0	0
	B	0	4.7	0
	C	5.1	0	5.1
TV171	E	5.1	5.1	5.1
	B	5.1	4.3	5.1
	C	0	5	0
TV186	E	0	0	0
	B	0	0	0
	C	0.3	0.3	0.3
TV187	E	0	0	0
	B	0.3	0.3	0.3
	C	0	1.2	1.2
TV188	E	1.9	1.9	4.1
	B	0	0	4.8
	C	5.1	5.1	5.1
TV200	E	2.7	4.4	2.7
	B	3.3	5	3.3
	C	5.1	5.1	5.1
TV201	E	1.2	4.3	1.2
	B	1.8	1.8	1.8
	C	3.3	5.1	3.3
TV223	E	0	1.1	0
	B	0	1.7	0
	C	0	3.6	0
TV225	E	0	0	0
	B	0	0	0
	C	0	0	0
TV227	E	0	3	0
	B	0	3.6	0
	C	0	5	0
TV243	E	0	3.6	0
	B	0	2.9	0
	C	0	1.8	0
TV248	E	0	1.2	0
	B	0	1.8	0
	C	0	3.7	0
TV250	E	0	0.6	0
	B	0	1.2	0
	C	0	4.6	0
TV251	E	0	3.9	0
	B	0	4.5	0
	C	0	5	0

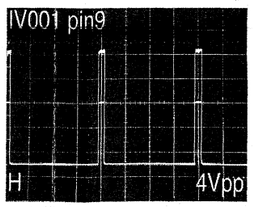

5

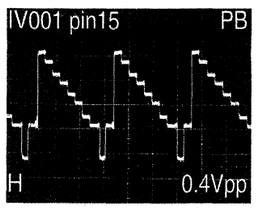

6

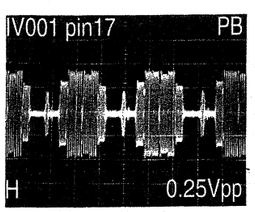

7

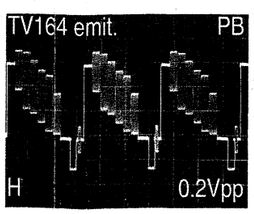

8

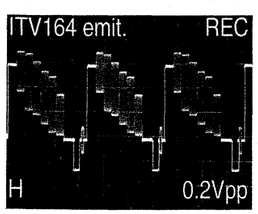

8

VIDEO SIGNAL PROCESSING - TRAITEMENT LUMINANCE / CHROMINANCE - VIDEO SIGNALVERARBEITUNG - ELABORAZIONE VIDEO - TRATAMIENTO VIDEO

SCHEMATIC DIAGRAM - SCHEMA DE PRINCIPE - SCHALTBILD - SCHEMA - ESQUEMA (T 8000 / VR 7021)

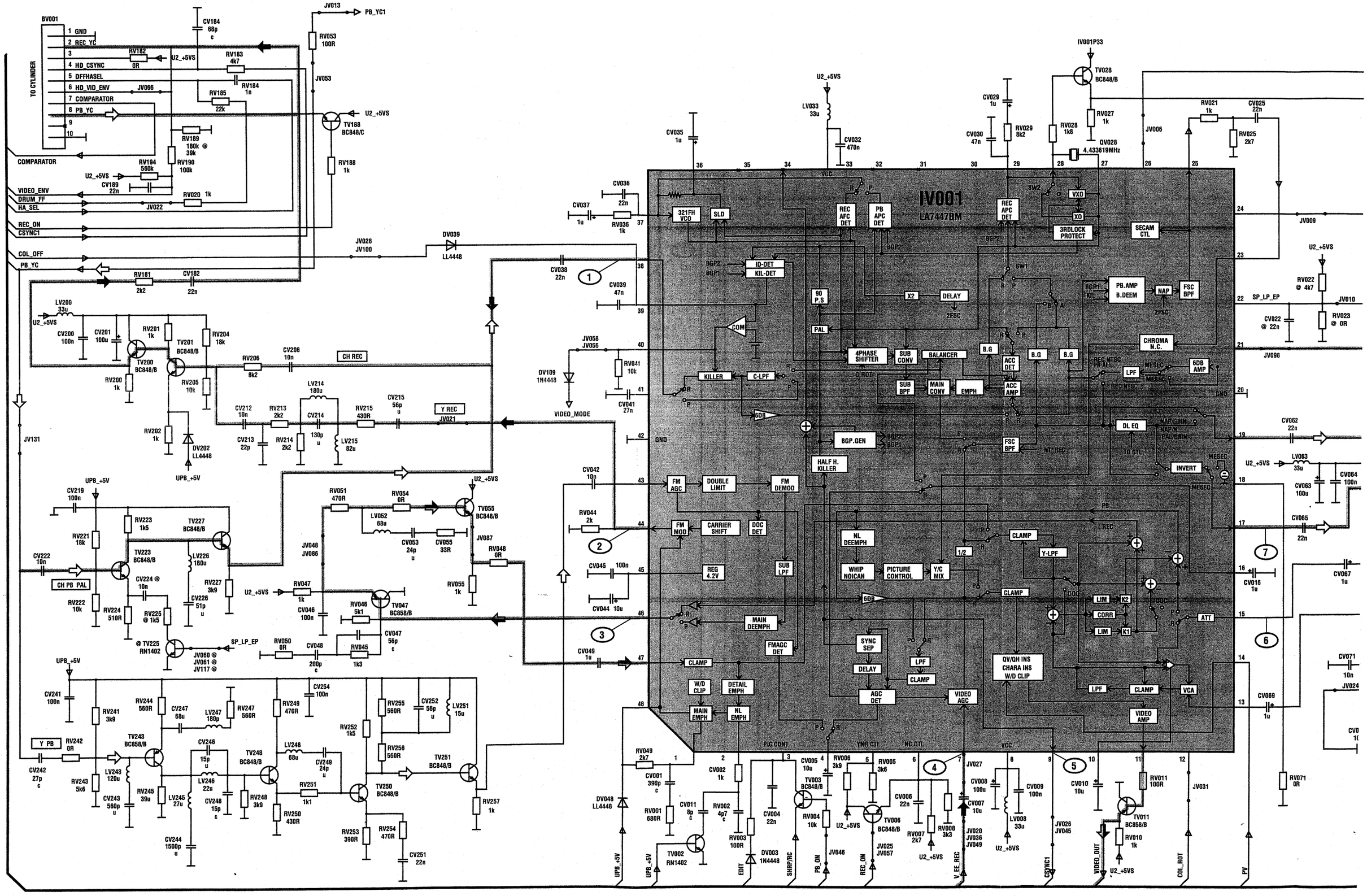

MIENTO VIDEO

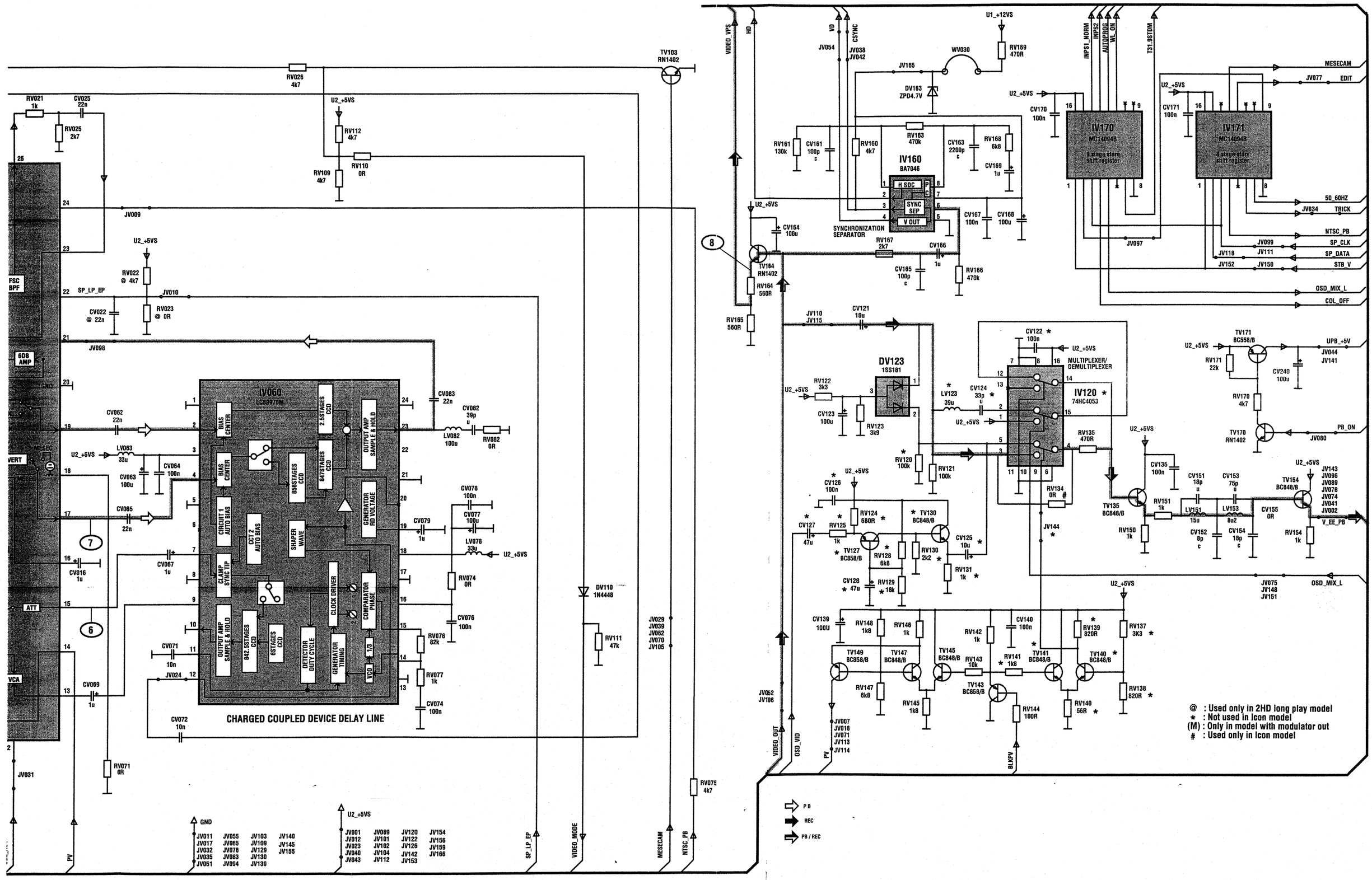

VIDEO SIGNAL PROCESSING - TRAITEMENT LUMINANCE / CHROMINANCE - VIDEO SIGNALVERARBEITUNG - ELABORAZIONE VIDEO - TRATAMIENTO VIDEO

SCHEMATIC DIAGRAM - SCHEMA DE PRINCIPE - SCHALTBILD - SCHEMA - ESQUEMA (M 9625 / VP 2601 / VP 2651 / V 1250 SVM)

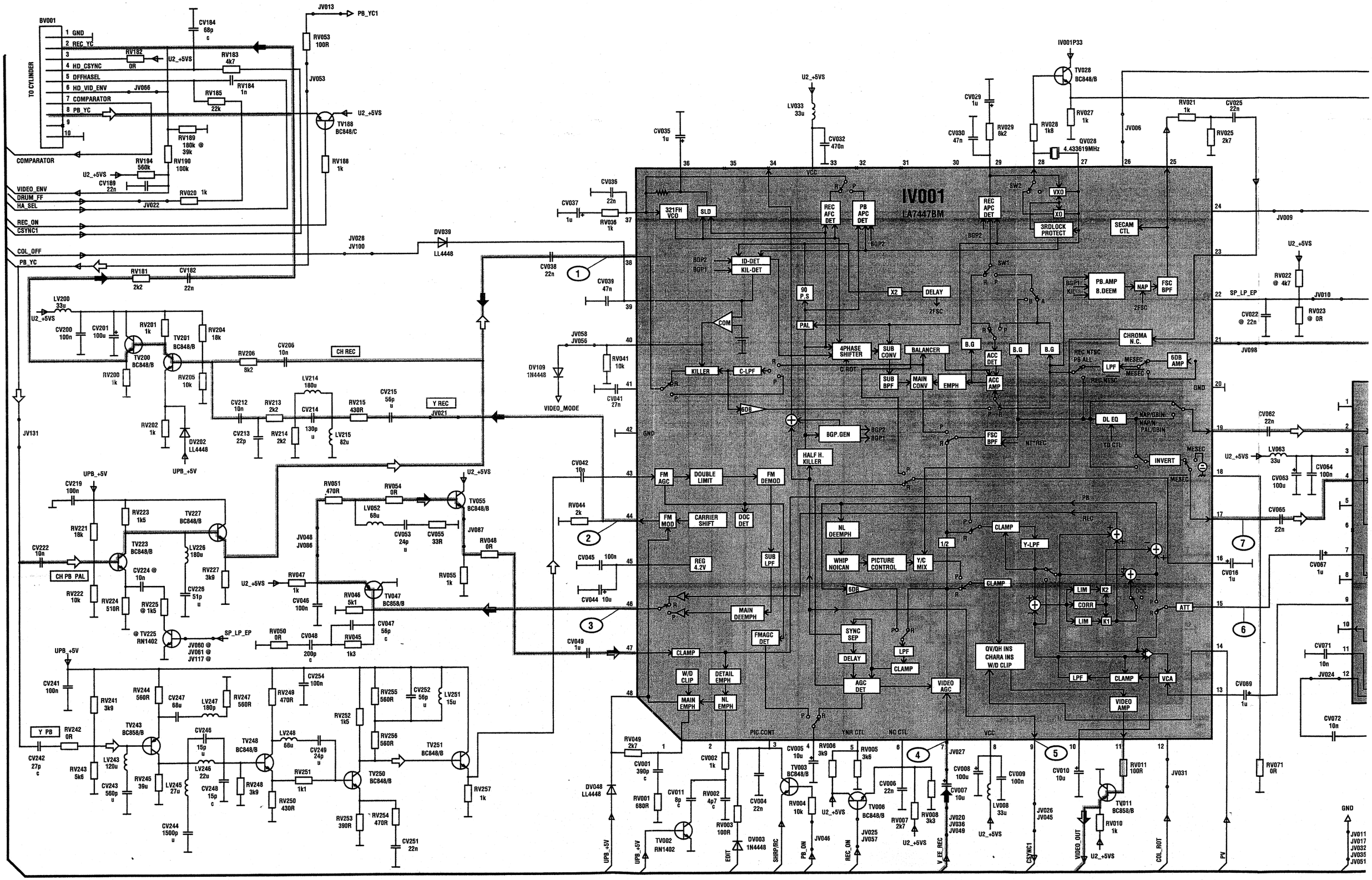

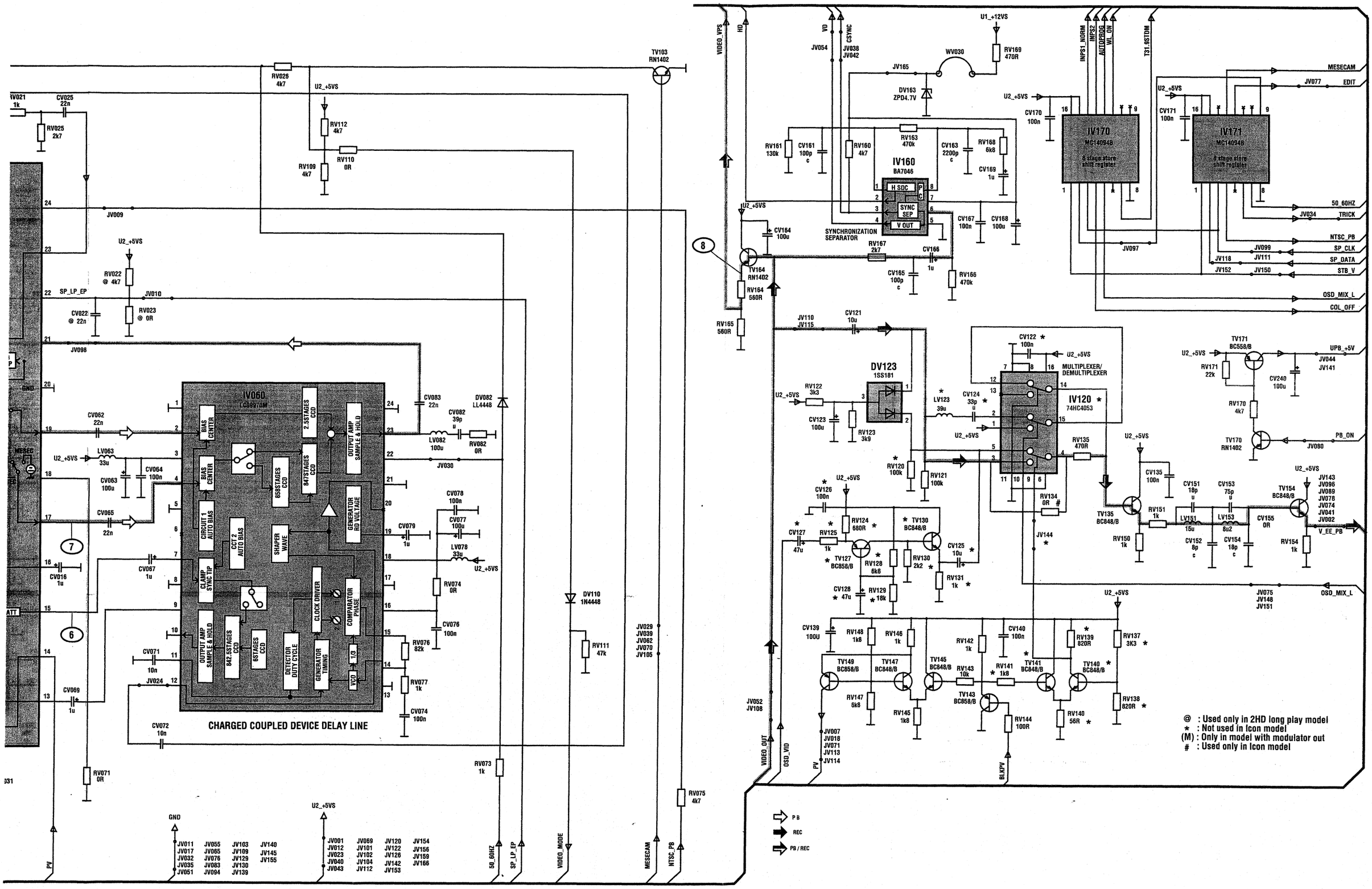
CHARGED COUPLED DEVICE DELAY LINE
IV060
LC89970M
IV160
BA7046
SYNCHRONIZATION SEPARATOR
IV170
MC14094B
8 stage store shift register
IV171
MC14094B
8 stage store shift register
IV120
74HC4053
MULTIPLEXER/ DEMULTIPLEXER
DV123
1SS181
@ : Used only in 2HD long play model
* : Not used in Icon model
(M) : Only in model with modulator out
: Used only in Icon model
PB
REC
PB / REC

VIDEO SIGNAL PROCESSING - TRAITEMENT LUMINANCE / CHROMINANCE - VIDEO SIGNALVERARBEITUNG - ELABORAZIONE VIDEO - TRATAMIENTO VIDEO

SCHEMATIC DIAGRAM - SCHEMA DE PRINCIPE - SCHALTBILD - SCHEMA - ESQUEMA (M 9523 / VR 7027)

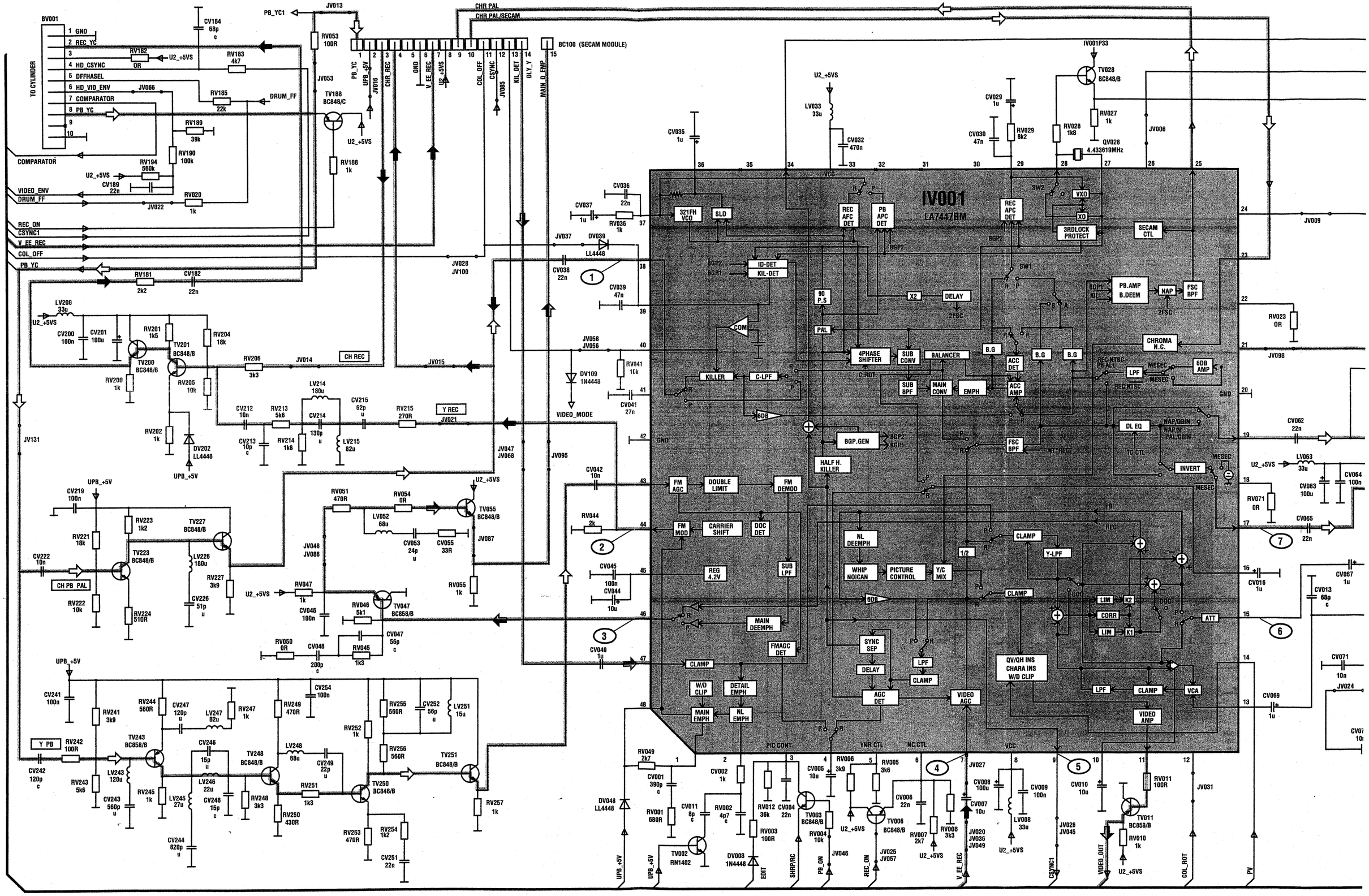

AMIENTO VIDEO

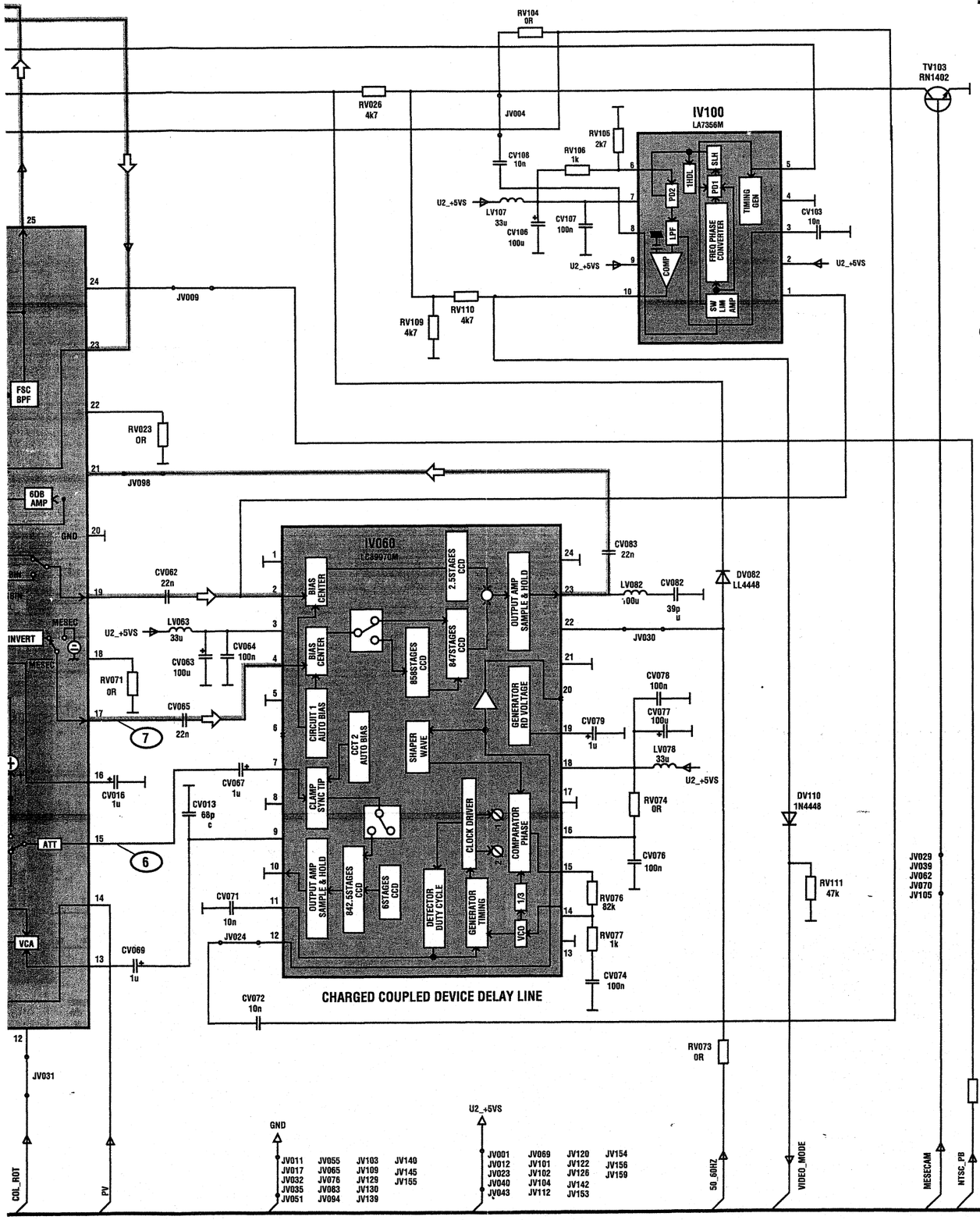

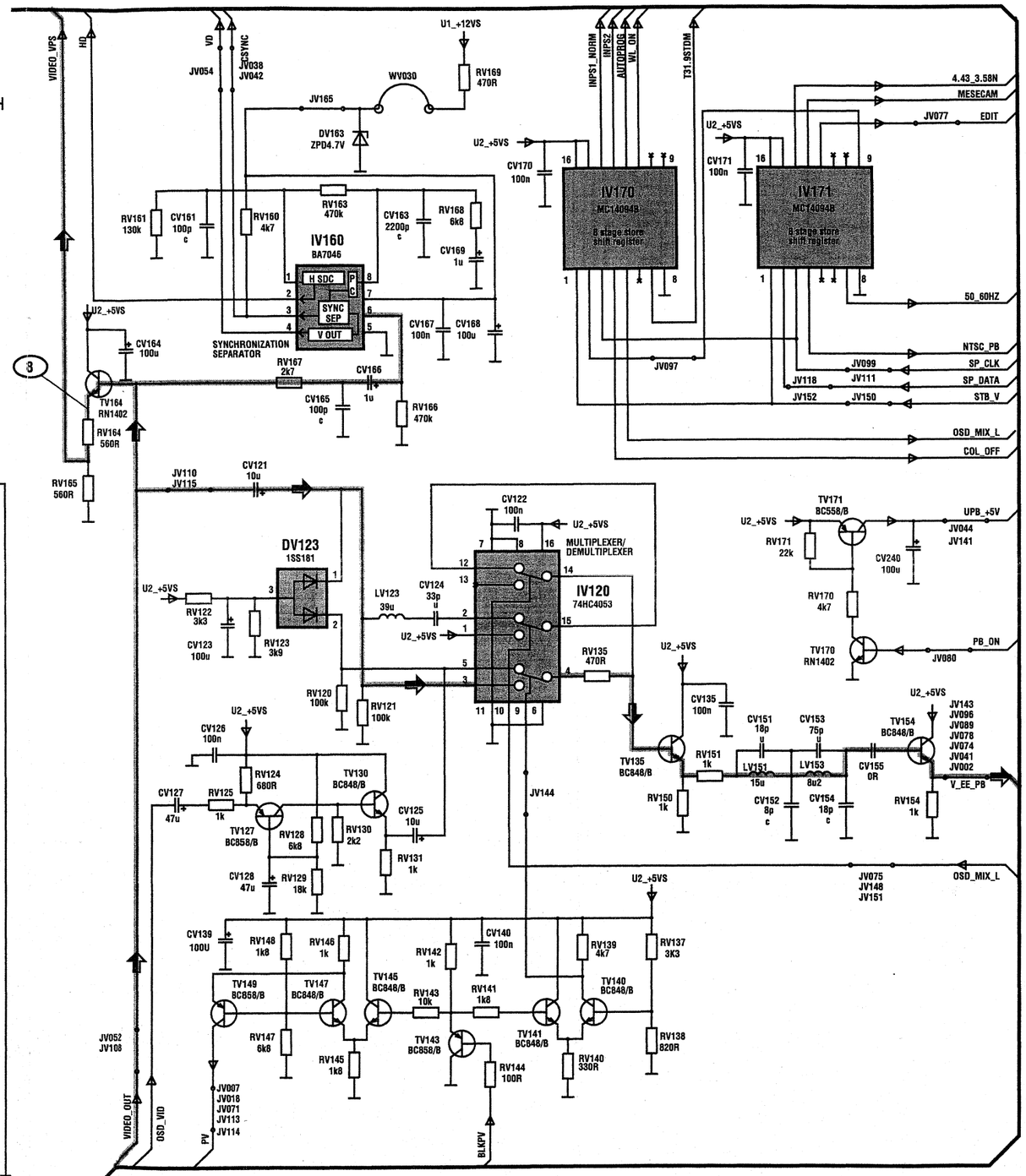

VIDEO SIGNAL PROCESSING - TRAITEMENT LUMINANCE / CHROMINANCE - VIDEO SIGNALVERARBEITUNG - ELABORAZIONE VIDEO - TRATAMIENTO VIDEO

SCHEMATIC DIAGRAM - SCHEMA DE PRINCIPE - SCHALTBILD - SCHEMA - ESQUEMA (VR 7041)

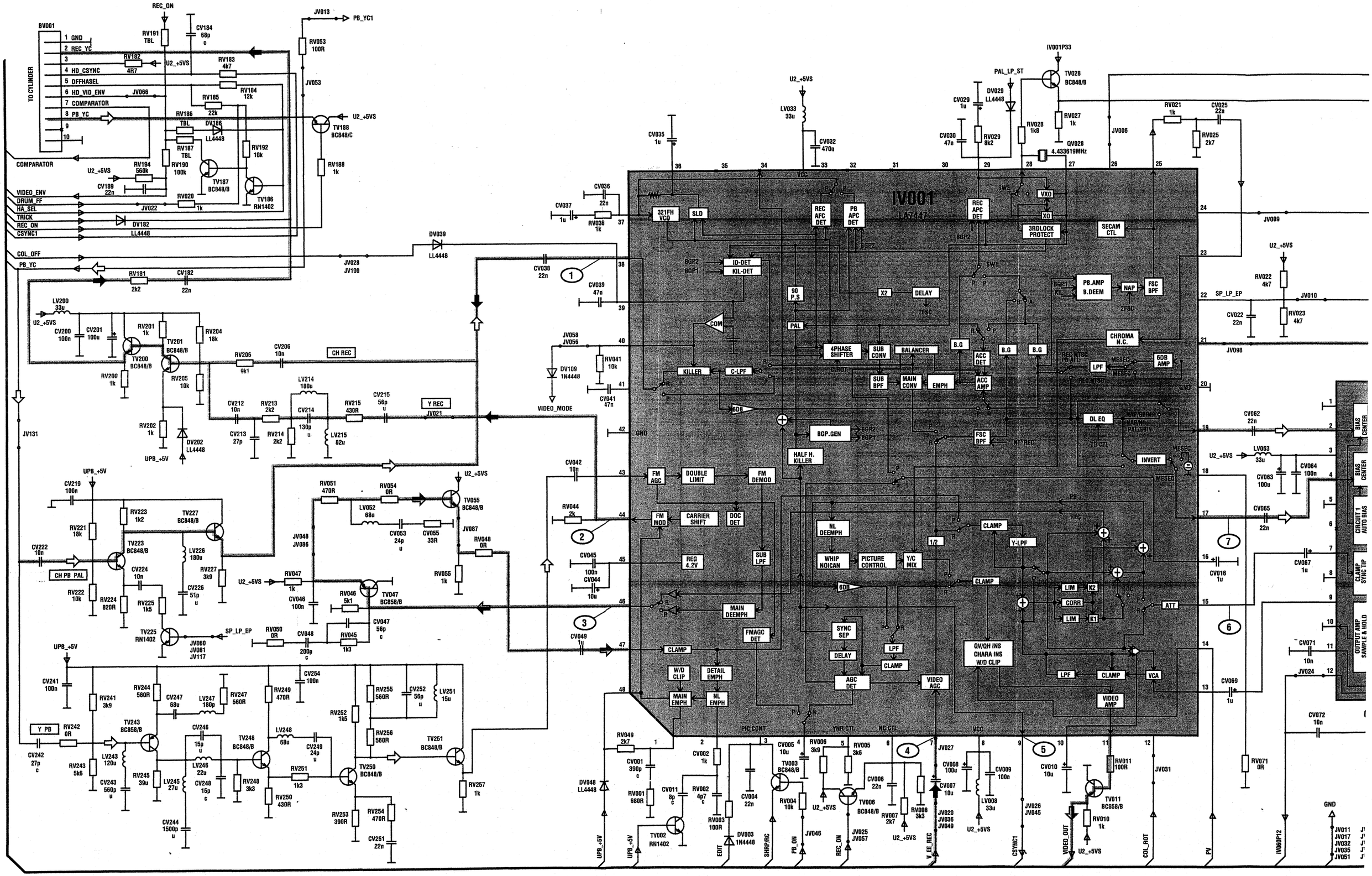

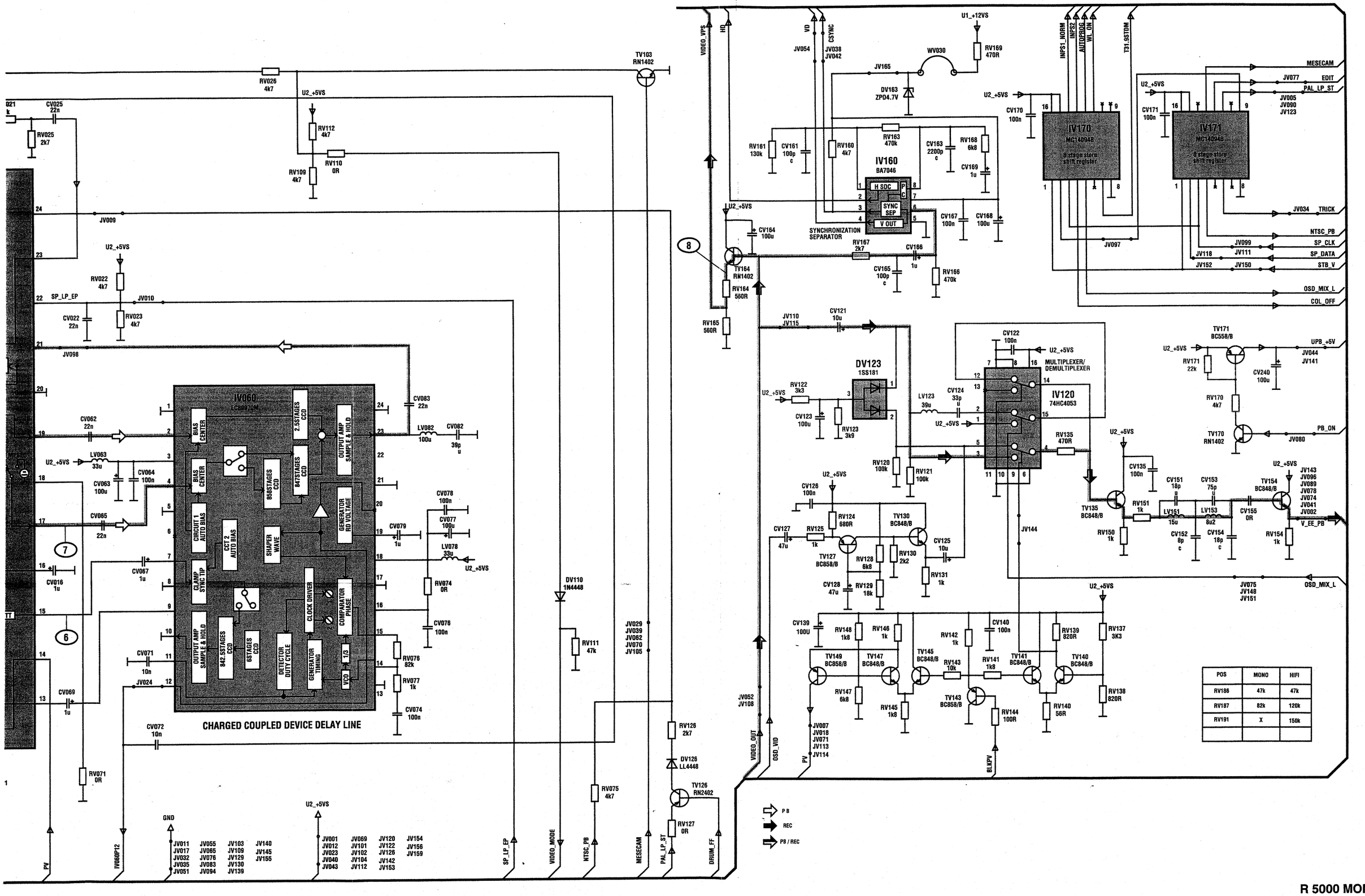

POS	MONO	HIFI
RV186	47k	47k
RV187	82k	120k
RV191	X	150k

VIDEO SIGNAL PROCESSING - TRAITEMENT LUMINANCE / CHROMINANCE - VIDEO SIGNALVERARBEITUNG - ELABORAZIONE VIDEO - TRATAMIENTO VIDEO

SCHEMATIC DIAGRAM - SCHEMA DE PRINCIPE - SCHALTBILD - SCHEMA - ESQUEMA (M 9655 / VP 4681 / V 1450 SVM / V 1455 SENSAR)

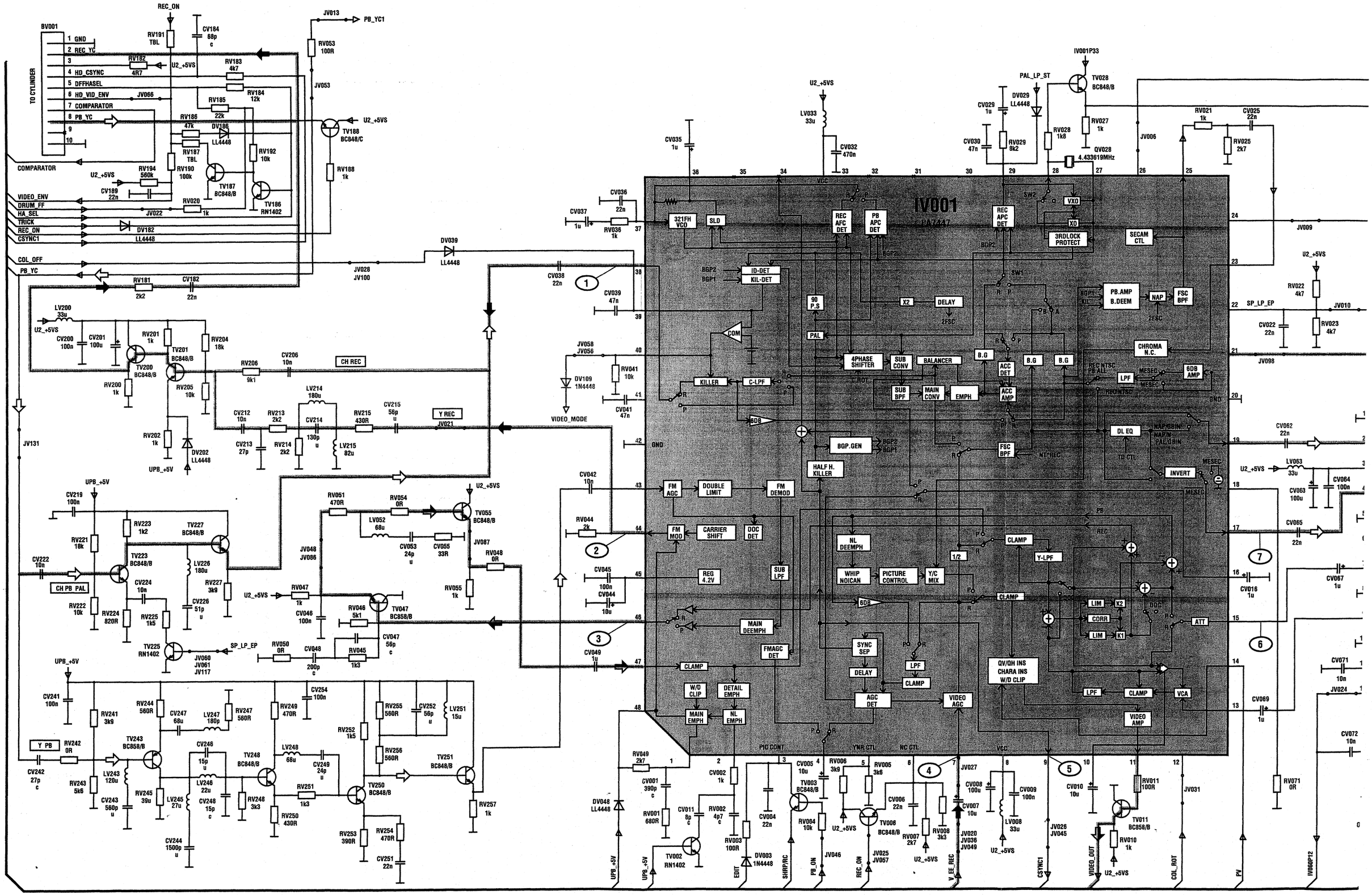

MIENTO VIDEO

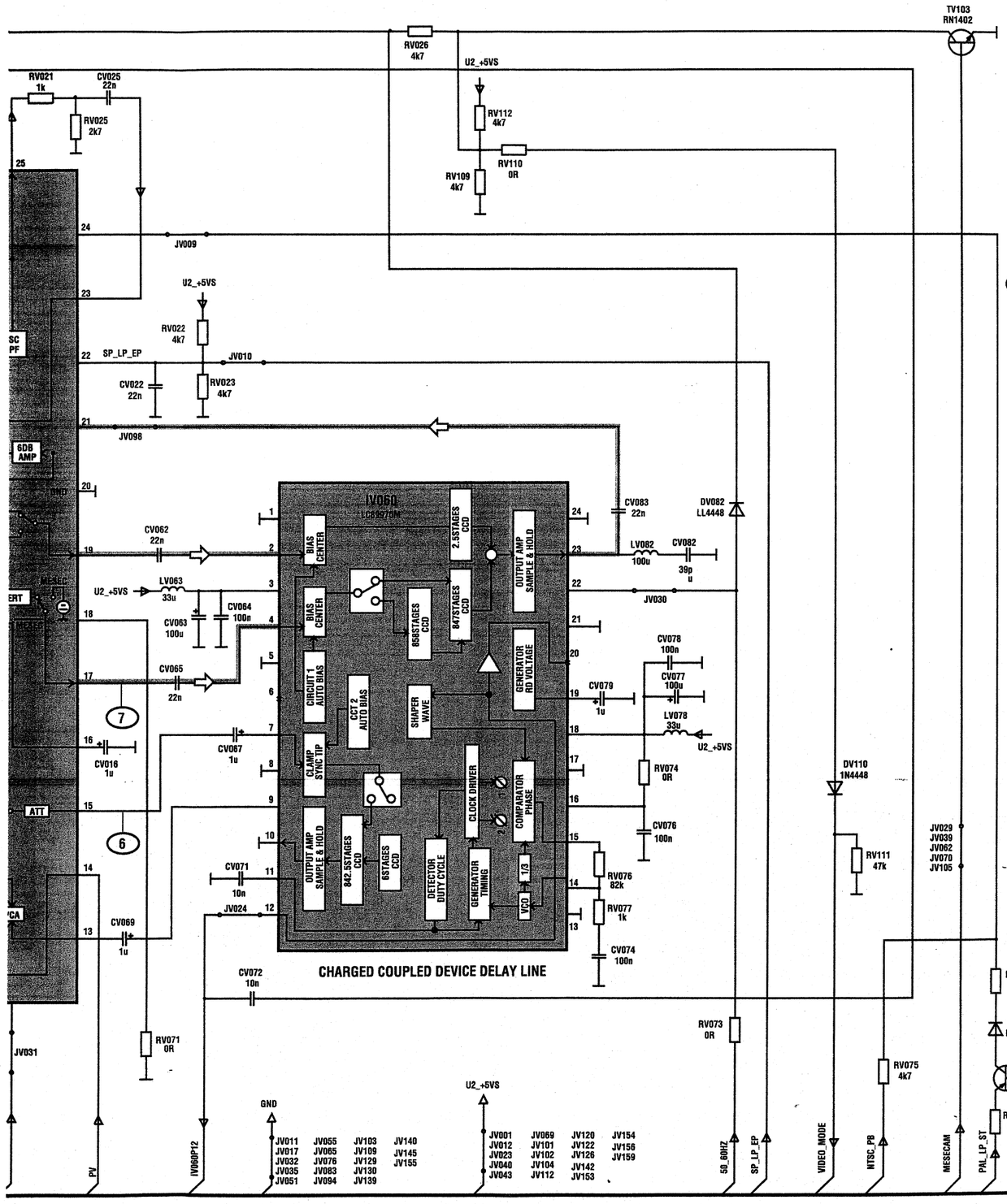

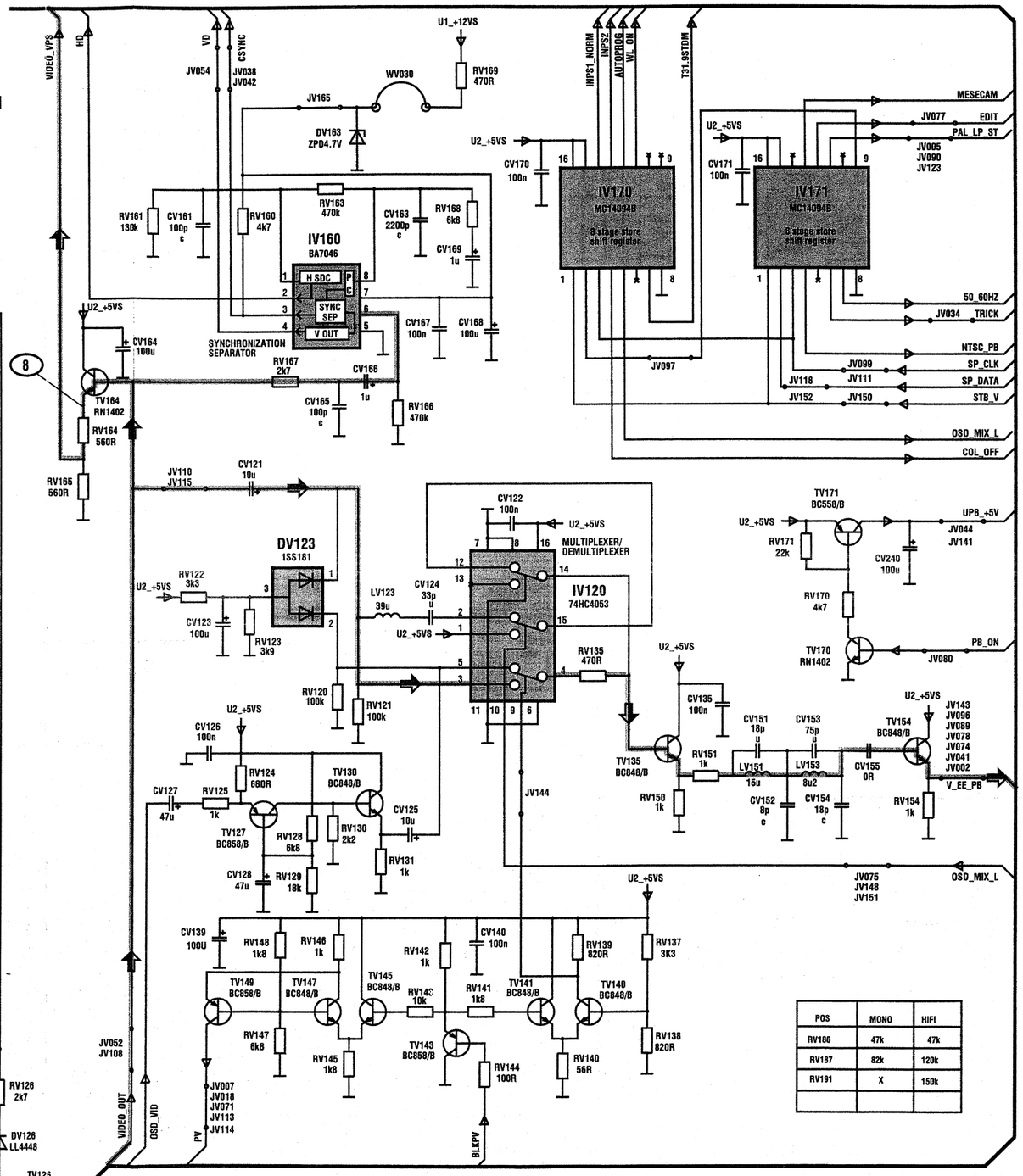

POS	MONO	HIFI
RV186	47k	47k
RV187	82k	120k
RV191	X	150k

VIDEO SIGNAL PROCESSING - TRAITEMENT LUMINANCE / CHROMINANCE - VIDEO SIGNALVERARBEITUNG - ELABORAZIONE VIDEO - TRATAMIENTO VIDEO

SCHEMATIC DIAGRAM - SCHEMA DE PRINCIPE - SCHALTBILD - SCHEMA - ESQUEMA (VP 4601)

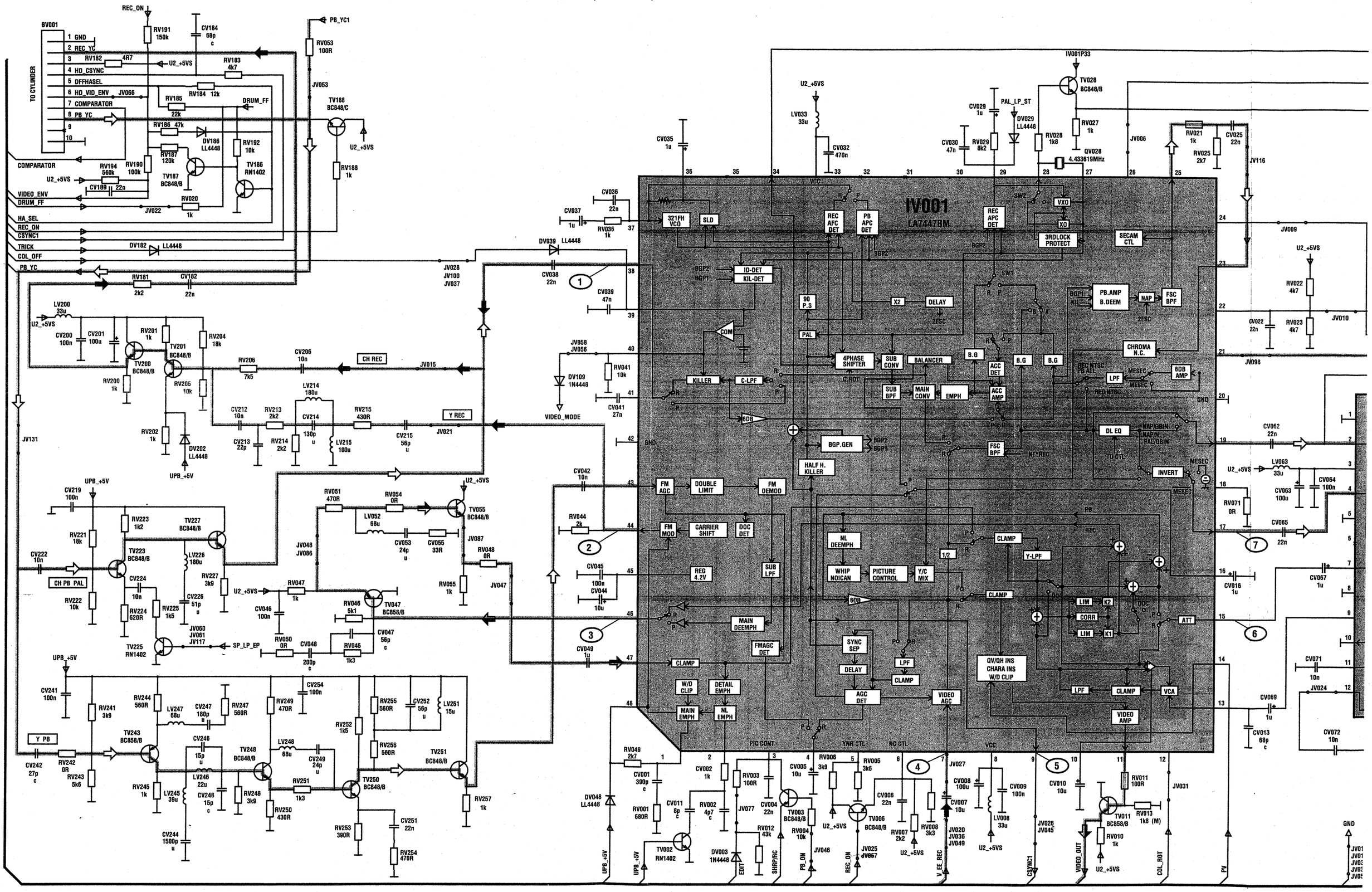

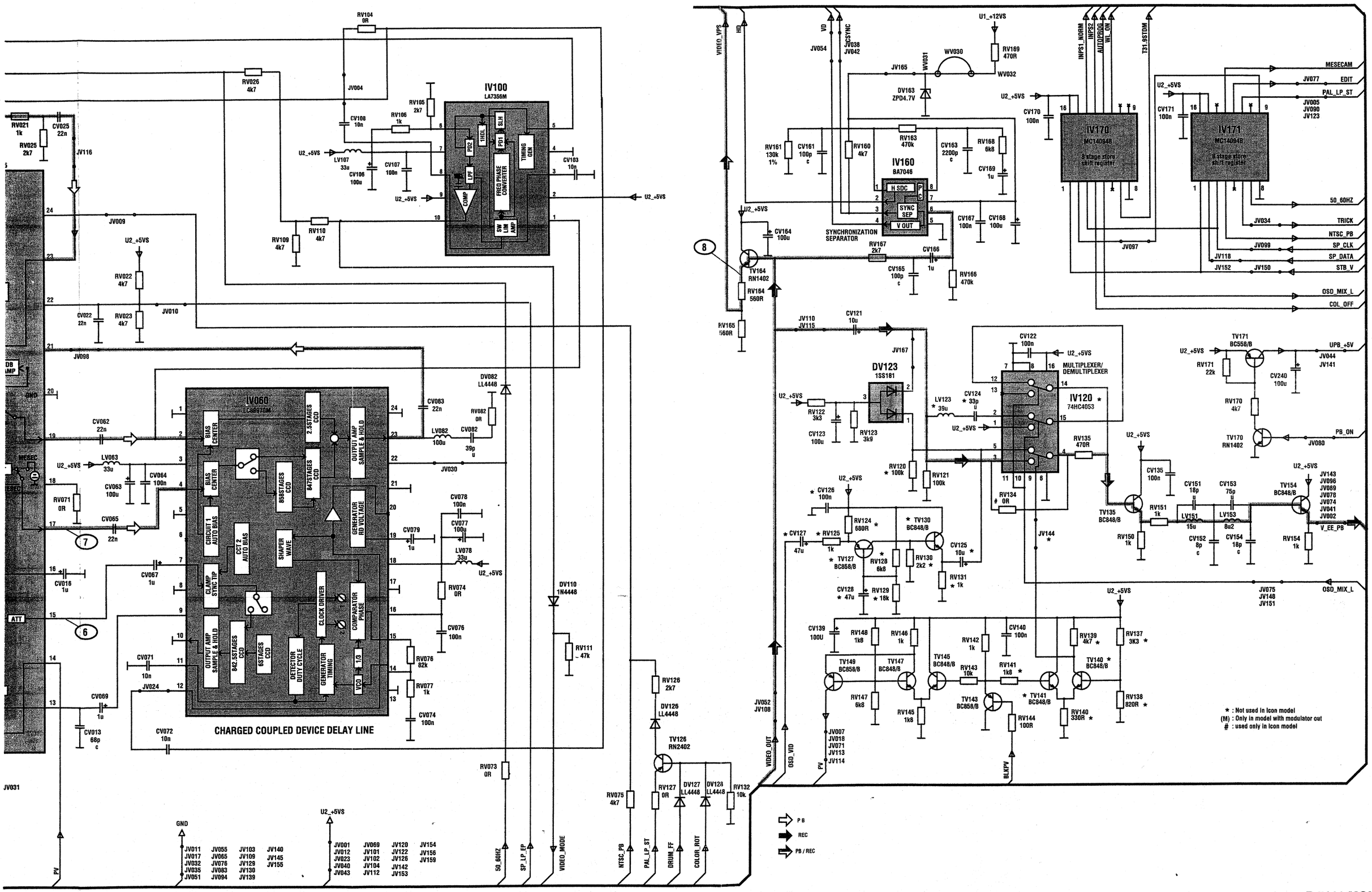
IV100
LA7356M
IV060
LC89970M
CHARGED COUPLED DEVICE DELAY LINE
IV160
BA7046
SYNCHRONIZATION SEPARATOR
IV170
MC14094B
IV171
MC14094B
IV120
74HC4053
MULTIPLEXER/ DEMULTIPLEXER
DV123
1SS181
* : Not used in Icon model
(M) : Only in model with modulator out
: used only in Icon model
PB
REC
PB / REC

Ersatzteile • Spare parts list • Liste de pièces de rechange
Lista parti di ricambio • Lista de piezas de recambio

Wichtig: Bei Ersatzteilbestellungen bitte unbedingt die entsprechende Bestellnummer angeben!
N. B.: When demanding Spare Parts it is absolutely necessary to quote the corresponding part number!
Important: Lors d'une commande de pièces de rechange, prière d'indiquer et tout cas le numéro de la pièce!
Importante: Ordinare sempre con il numero correspondenti di codice!
Importante: Pedir siempre los recambios con el numero correspondiente codigo!

Pos.	Art.-Nr Part No. Code		Bezeichnung	Part	Désignation
			MOD./AUSTAUSCHTEILE:	**EXCHANGE PARTS:**	**ECHANGE PLATINE:**
V1250SVM	205.596.90		FE5201 TUNER (MODULATOR)	FE5201 TUNER	FE5201 TUNER
-	204.272.40	S	SMPS R5P3 NETZTEIL KPL.	SMPS R5P3 POWER ASSY	SMPS R5P3 D'ALIMENTATION EQ.
-	205.327.20		IF4101A ZF-EINHEIT	IF4101A UNIT IF	IF4101A UNITE MF
V1450SVM	205.596.90		FE5201 TUNER (MODULATOR)	FE5201 TUNER	FE5201 TUNER
-	204.272.40	S	SMPS R5P3 NETZTEIL KPL.	SMPS R5P3 POWER ASSY	SMPS R5P3 D'ALIMENTATION EQ.
-	205.327.20		IF4101A ZF-EINHEIT	IF4101A UNIT IF	IF4101A UNITE MF
V1455SEN	203.465.40		FE5100 TUNER	FE5100 TUNER	FE5100 TUNER
-	204.390.80	S	SMPS R5R1 NETZTEIL KPL.	SMPS R5R1 POWER ASSY	SMPS R5R1 D'ALIMENTATION EQ.
-	205.327.20		IF4101A ZF-EINHEIT	IF4101A UNIT IF	IF4101A UNITE MF
VR7021	205.596.90		FE5201 TUNER (MODULATOR)	FE5201 TUNER	FE5201 TUNER
-	204.272.60	S	SMPS R5P4 NETZTEIL KPL.	SMPS R5P4 POWER ASSY	SMPS R5P4 D'ALIMENTATION EQ.
-	205.327.20		IF4101A ZF-EINHEIT	IF4101A UNIT IF	IF4101A UNITE MF
VR7041	205.596.90		FE5201 TUNER (MODULATOR)	FE5201 TUNER	FE5201 TUNER
-	204.272.60	S	SMPS R5P4 NETZTEIL KPL.	SMPS R5P4 POWER ASSY	SMPS R5P4 D'ALIMENTATION EQ.
-	205.327.20		IF4101A ZF-EINHEIT	IF4101A UNIT IF	IF4101A UNITE MF
M9523	201.673.90		FE4212 TUNER (HF-MODULATOR)	FE4212 TUNER	FE4212 TUNER
-	204.272.40	S	SMPS R5P3 NETZTEIL KPL.	SMPS R5P3 POWER ASSY	SMPS R5P3 D'ALIMENTATION EQ.
-	205.573.40		IF4153M ZF-EINHEIT	IF4153M UNIT IF	IF4153M UNITE MF
M9625	205.596.90		FE5201 TUNER (MODULATOR)	FE5201 TUNER	FE5201 TUNER
-	204.272.40	S	SMPS R5P3 NETZTEIL KPL.	SMPS R5P3 POWER ASSY	SMPS R5P3 D'ALIMENTATION EQ.
-	205.327.20		IF4101A ZF-EINHEIT	IF4101A UNIT IF	IF4101A UNITE MF
M9655	205.596.90		FE5201 TUNER (MODULATOR)	FE5201 TUNER	FE5201 TUNER
-	204.272.40	S	SMPS R5P3 NETZTEIL KPL.	SMPS R5P3 POWER ASSY	SMPS R5P3 D'ALIMENTATION EQ.
-	205.327.20		IF4101A ZF-EINHEIT	IF4101A UNIT IF	IF4101A UNITE MF
T8000	205.596.90		FE5201 TUNER (MODULATOR)	FE5201 TUNER	FE5201 TUNER
-	204.272.40	S	SMPS R5P3 NETZTEIL KPL.	SMPS R5P3 POWER ASSY	SMPS R5P3 D'ALIMENTATION EQ.
-	205.327.20		IF4101A ZF-EINHEIT	IF4101A UNIT IF	IF4101A UNITE MF
VP2601	205.596.90		FE5201 TUNER (MODULATOR)	FE5201 TUNER	FE5201 TUNER
-	204.272.40	S	SMPS R5P3 NETZTEIL KPL.	SMPS R5P3 POWER ASSY	SMPS R5P3 D'ALIMENTATION EQ.
-	205.327.20		IF4101A ZF-EINHEIT	IF4101A UNIT IF	IF4101A UNITE MF
VP2651	205.596.90		FE5201 TUNER (MODULATOR)	FE5201 TUNER	FE5201 TUNER
-	204.272.40	S	SMPS R5P3 NETZTEIL KPL.	SMPS R5P3 POWER ASSY-	SMPS R5P3 D'ALIMENTATION EQ.
-	205.327.20		IF4101A ZF-EINHEIT	IF4101A UNIT IF	IF4101A UNITE MF
VP4601	201.803.20		FE4202 TUNER (HF-MODULATOR)	FE4202 TUNER	FE4202 TUNER

Pos.	Art.-Nr Part No. Code		Bezeichnung	Part	Désignation
-	201.901.60		IF4112 ZF-EINHEIT	IF4112 UNIT IF	IF4112 UNITE MF
-	204.272.40	S	SMPS R5P3 NETZTEIL KPL.	SMPS R5P3 POWER ASSY	SMPS R5P3 D'ALIMENTATION EQ.
VP4681	205.596.90		FE5201 TUNER (MODULATOR)	FE5201 TUNER	FE5201 TUNER
-	204.272.40	S	SMPS R5P3 NETZTEIL KPL.	SMPS R5P3 POWER ASSY	SMPS R5P3 D'ALIMENTATION EQ.
-	205.327.20		IF4101A ZF-EINHEIT	IF4101A UNIT IF	IF4101A UNITE MF
			MOD./KEIN AUSTAUSCH:	**MODULES:**	**PLATINE:**
V1455SEN	204.358.50		FCB R5BV1 LTP.FRONT	FCB R5BV1 PCB JACK	FCB R5BV1 PLATINE PRISE
V1455SEN	204.430.80		JSB R5BV1 LTP.JOG SHUTTLE	JSB R5BV1 PCB JOG SHUTTLE	JSB R5BV1 PL. JOG SHUTTLE
M9625	206.057.30		FCB R5DU1 LTP.FRONT CONNECTION	FCB R5DU1 PCB JACK	FCB R5DU1 PLATINE PRISE
M9655	206.057.30		FCB R5DU1 LTP.FRONT CONNECTION	FCB R5DU1 PCB JACK	FCB R5DU1 PLATINE PRISE
T8000	205.706.40		FCB R5DD1 LTP.FRONT CONNECTION	FCB R5DD1 PCB JACK	FCB R5DD1 PLATINE PRISE
VP2601	205.480.60		FCB R5DV1 LTP.FRONT CONNECTION	FCB R5DV1 PCB JACK	FCB R5DV1 PLATINE PRISE
VP2651	205.480.50		FCB R5CV1 LTP.FRONT CONNECTION	FCB R5CV1 PCB JACK	FCB R5CV1 PLATINE PRISE
VP4601	205.287.40		FCB R5AD1 LTP. FRONT	FCB R5AD1 PCB JACK	FCB R5AD1 PLATINE PRISE
VP4681	205.480.50		FCB R5CV1 LTP.FRONT CONNECTION	FCB R5CV1 PCB JACK	FCB R5CV1 PLATINE PRISE
			MECHANISCHE TEILE:	**MECHANICAL PARTS:**	**PIECES MECANIQUES:**
V1250SVM	206.464.00		FRONTPLATTE V1250SVM KPL.	FRONT PANEL ASSY	FACADE EQ.
-	206.327.50		Gehäuseoberteil	Top cover	Coffret superieur
-	206.573.90		Klappe Cassettenfach V1250SVM	Flap cassette print	Clapet du compartiment à cassette
-	308.985.00		Feder, Cassettenklappe	Spring	Ressort
V1450SVM	206.463.90		FRONTPLATTE V1450SVM KPL.	FRONT PANEL ASSY	FACADE EQ.
-	206.327.50		Gehäuseoberteil	Top cover	Coffret superieur
-	206.573.20		Klappe Cassettenfach V1450SVM	Flap cassette print	Clapet du compartiment à cassette
-	308.985.00		Feder, Cassettenklappe	Spring	Ressort
V1455SEN	204.257.60		FRONTPLATTE V1455SEN KPL.	FRONT PANEL ASSY	FACADE EQ.
-	202.138.10		Magnet CATCH	Magnet catch	Aimant
-	203.297.20		Drehfeder R5000/M650	Spring torsion	Ressort de torsion
-	203.519.70		Magnet kpl. R4000 CAT2	Magnet door	Aimant
-	204.973.60		Bedienteilklappe R5249G	Door	Volet
-	204.974.10		Klappe Cassettenfach V1455SENSAR	Flap cassette print	Clapet du compartiment à cassette
-	203.622.10		Gehäuseoberteil R5000	Top cover	Coffret superieur
-	203.860.90		Hebel SHUTTLE	Lever SHUTTLE	Levier SHUTTLE
-	204.458.50		Knopf JOG	Knob JOG	Bouton JOG
VR7021	206.143.20		FRONTPLATTE VR7021 KPL.	FRONT PANEL ASSY	FACADE EQ.
-	203.297.20		Drehfeder R5000/M650	Spring torsion	Ressort de torsion
-	205.507.60		Gehäuseoberteil R5444GR	Top cover	Coffret superieur
-	206.143.70		CASSETTENKLAPPE	CASSETTE DOOR	VOLET CASS
VR7041	205.507.40		FRONTPLATTE VR7041 KPL.	FRONT PANEL ASY	FACADE EQUIPEE
-	203.297.20		Drehfeder R5000/M650	Spring torsion	Ressort de torsion
-	205.507.60		Gehäuseoberteil R5444GR	Top cover	Coffret superieur
-	206.000.90		Klappe Cassettenfach VR7041	Flap cassette print	Clapet du compartiment à cassette
M9523	205.888.90		FRONTPLATTE M9523 KPL.	FRONT PANEL ASY	FACADE EQ.
-	203.297.20		Drehfeder R5000/M650	Spring torsion	Ressort de torsion
-	205.991.70		Klappe Cassettenfach M9523	Flap cassette print	Clapet du compartiment à cassette
-	206.471.20		Gehäuseoberteil R5174G	Top cover	Coffret superieur
M9625	206.368.90		FRONTPLATTE M9625 KPL.	FRONT PANEL ASSY	FACADE EQ.
-	206.471.20		Gehäuseoberteil R5174G	Top cover	Coffret superieur
M9655	206.132.70		FRONTPLATTE M9655 KPL.	FRONT PANEL ASSY	FACADE EQ.
-	204.167.40		Filter Display T4324U	Display filter	Filtre display
-	206.471.20		Gehäuseoberteil R5174G	Top cover	Coffret superieur
T8000	205.918.50		FRONTPLATTE T8000 KPL	FRONT PANEL ASSY	FACADE EQ
-	202.014.90		Drehfeder, R4000	Spring torsion	Ressort de torsion
-	205.332.10		Gehäuseoberteil R4414PS2	Top cover	Coffret superieur
-	205.374.80		Bedient.-Klappe rechts R4144G2	Door right	Volet droit
-	206.061.50		Bedient.-Klappe links R5103GR	Door left	Volet gauche
-	206.061.80		Klappe Cassettenfach T8000	Flap cassette print	Clapet du compartiment à cassette

Pos.	Art.-Nr Part No. Code	Bezeichnung	Part
VP2601	206.289.60	FRONTPLATTE VP2601 KPL	FRONT PANEL ASSY
-	203.297.20	Drehfeder R5000/M650	Spring torsion
-	203.622.10	Gehäuseoberteil R5000	Top cover
-	206.286.80	Klappe Cassettenfach VP2601	Flap cassette print
VP2651	206.294.90	FRONTPLATTE VP2651 KPL.	FRONT PANEL ASSY
-	202.138.10	Magnet CATCH	Magnet catch
-	203.297.20	Drehfeder R5000/M650	Spring torsion
-	203.519.70	Magnet kpl. R4000 CAT2	Magnet door
-	203.622.10	Gehäuseoberteil R5000	Top cover
-	203.862.50	Filterscheibe R5000 TOP Satellit	Filter Top R5000
-	205.837.70	Bedienteilklappe R5024U	Flap
-	206.286.10	Klappe Cassettenfach VP2651	Flap cassette print
VP4601	206.322.40	FRONTPLATTE VP4601 KPL.	FRONT PANEL ASSY
-	202.014.90	Drehfeder, R4000	Spring torsion
-	205.332.10	Gehäuseoberteil R4414PS2	Top cover
-	206.420.20	Bedient.-Klappe rechts R5003MER	Door right
-	206.420.30	Bedient.-Klappe links R5003MER	Door left
-	206.420.70	Klappe Cassettenfach VP4601	Flap cassette print
VP4681	206.328.50	FRONTPLATTE VP4681 KPL.	FRONT PANEL ASSY
-	202.138.10	Magnet CATCH	Magnet catch
-	203.297.20	Drehfeder R5000/M650	Spring torsion
-	203.519.70	Magnet kpl. R4000 CAT2	Magnet door
-	203.622.10	Gehäuseoberteil R5000	Top cover
-	203.862.50	Filterscheibe R5000 TOP Satellit	Filter Top R5000
-	205.837.70	Bedienteilklappe R5024U	Flap
-	206.361.30	Klappe Cassettenfach VP4681	Flap cassette print
V1250SVM	101.452.50	Kopftrommel S2PS TTN4, kpl.	Drum assy, 2HD
V1450SVM	101.453.40	Kopftrommel W4P TTN, kpl.	Drum assy, 4HD
V1455SEN	101.453.40	Kopftrommel W4P TTN, kpl.	Drum assy, 4HD
VR7021	101.452.50	Kopftrommel S2PS TTN4, kpl.	Drum assy, 2HD
VR7041	101.453.40	Kopftrommel W4P TTN, kpl.	Drum assy, 4HD
M9523	101.452.50	Kopftrommel S2PS TTN4, kpl.	Drum assy, 2HD
M9625	101.453.20	Kopftrommel S2P LP TTN4, kpl.	Drum assy, 2HD
M9655	101.453.40	Kopftrommel W4P TTN, kpl.	Drum assy, 4HD
T8000	101.452.50	Kopftrommel S2PS TTN4, kpl.	Drum assy, 2HD
VP2601	101.452.50	Kopftrommel S2PS TTN4, kpl.	Drum assy, 2HD
VP2651	101.453.20	Kopftrommel S2P LP TTN4, kpl.	Drum assy, 2HD
VP4601	101.453.40	Kopftrommel W4P TTN, kpl.	Drum assy, 4HD
VP4681	101.453.40	Kopftrommel W4P TTN, kpl.	Drum assy, 4HD
B410/2	201.871.70	Lademotor kpl. R4000	Loading drive motor asy
B424/2	201.872.40	Lademotor R4000	Loading motor
B432/2	201.872.90	Kurvenradschalter SW-LOADING	Cam sw
B440/2	201.873.30	Nockenzahnrad R4000	Cam gear
B450/2	201.873.20	Zahnrad kpl. S-LOADING	Gear asy
B470/2	201.874.40	Zahnrad kpl. T-LOADING	Gear asy
B560/2	202.029.80	Motor, Capstan R4000	Capstan motor
B580/2	201.887.20	Antriebsriemen R4000	Belt
G420/2	201.865.10	Führungsrollenplatte kpl. Abw.Seite	Supply slider asy
G450/2	201.866.30	Führungsrollenplatte kpl. Aufw.Seite	Take up slider asy
G480/1	202.962.80	ACE-Kopf V3 S-COMBAT	Audio/Control head
G530/1	201.887.40	Voll-Löschkopf R4000	Full erase head
G560/1	201.870.20	Andruckrolle kpl. R4000	Pinch lever asy
G590/1	201.871.50	Feder PINCH	Spring
K110/2	201.861.10	Bandteller kpl. Abw.Seite	Supply reel asy
K140/2	201.862.20	Bandteller kpl Aufw.Seite	Take up reel asy
K180/2	201.862.80	Schwenkkupplungsrolle kpl.	Idler arm asy
K200/2	201.864.60	Riemenscheibe CENTER	Gear pulley
K252/2	201.868.40	Spannband kpl. R4000	Brake band asy
K254/2	201.868.60	Halter, Bremsband R4000	Holder
K260/2	203.923.70	Feder V3 TENSION LEVER	Spring
K270/2	201.869.10	Verriegelungshebel TENSION LEVER	Hook
K280/2	201.869.20	Hebel HOOK	Lever

	Part	Désignation
TE VP2601 KPL	FRONT PANEL ASSY	FACADE EQ
R5000/M650	Spring torsion	Ressort de torsion
rteil R5000	Top cover	Coffret superieur
ettenfach VP2601	Flap cassette print	Clapet du compartiment à cassette
TE VP2651 KPL.	FRONT PANEL ASSY	FACADE EQ.
CATCH	Magnet catch	Aimant
R5000/M650	Spring torsion	Ressort de torsion
R4000 CAT2	Magnet door	Aimant
rteil R5000	Top cover	Coffret superieur
R5000 TOP Satellit	Filter Top R5000	Glace décorée (Affcheur)
ppe R5024U	Flap	Volet
ettenfach VP2651	Flap cassette print	Clapet du compartiment à cassette
TE VP4601 KPL.	FRONT PANEL ASSY	FACADE EQ.
4000	Spring torsion	Ressort de torsion
rteil R4414PS2	Top cover	Coffret superieur
ppe rechts R5003MER	Door right	Volet droit
ppe links R5003MER	Door left	Volet gauche
ettenfach VP4601	Flap cassette print	Clapet du compartiment à cassette
TE VP4681 KPL.	FRONT PANEL ASSY	FACADE EQ.
CATCH	Magnet catch	Aimant
R5000/M650	Spring torsion	Ressort de torsion
R4000 CAT2	Magnet door	Aimant
rteil R5000	Top cover	Coffret superieur
R5000 TOP Satellit	Filter Top R5000	Glace décorée (Affcheur)
ppe R5024U	Flap	Volet
ettenfach VP4681	Flap cassette print	Clapet du compartiment à cassette
S2PS TTN4, kpl.	Drum assy, 2HD	Tambour de têtes, eq.
W4P TTN, kpl.	Drum assy, 4HD	Tambour de têtes, eq.
W4P TTN, kpl.	Drum assy, 4HD	Tambour de têtes, eq.
S2PS TTN4, kpl.	Drum assy, 2HD	Tambour de têtes, eq.
S2P LP TTN4, kpl.	Drum assy, 2HD	Tambour de têtes, eq.
W4P TTN, kpl.	Drum assy, 4HD	Tambour de têtes, eq.
S2PS TTN4, kpl.	Drum assy, 2HD	Tambour de têtes, eq.
S2PS TTN4, kpl.	Drum assy, 2HD	Tambour de têtes, eq.
S2P LP TTN4, kpl.	Drum assy, 2HD	Tambour de têtes, eq.
W4P TTN, kpl.	Drum assy, 4HD	Tambour de têtes, eq.
W4P TTN, kpl.	Drum assy, 4HD	Tambour de têtes, eq.
l. R4000	Loading drive motor asy	Ens commande fonctions equipe
R4000	Loading motor	Moteur
ialter SW-LOADING	Cam sw	Came
ad R4000	Cam gear	Came
S-LOADING	Gear asy	Roue dentee eq.
T-LOADING	Gear asy	Roue dentee eq.
an R4000	Capstan motor	Moteur cabestan
an R4000	Belt	Courroie
nplatte kpl. Abw.Seite	Supply slider asy	Supply slider eq.
nplatte kpl. Aufw.Seite	Take up slider asy	Take up slider eq.
S-COMBAT	Audio/Control head	Tête de contrôle et audio
of R4000	Full erase head	Tete d'effacement
kpl. R4000	Pinch lever asy	Galet presseur eq.
PINCH	Spring	Ressort
Abw.Seite	Supply reel asy	Porte-bobine debiteur eq.
Aufw.Seite	Take up reel asy	Porte-bobine recepteur eq.
lungsrolle kpl.	Idler arm asy	Poulie intermediaire eq.
e CENTER	Gear pulley	Poulie
l. R4000	Brake band asy	Frein tension bande eq.
band R4000	Holder	Support
TENSION LEVER	Spring	Ressort
hebel TENSION LEVER	Hook	Maintien commande porte-cassette
HOOK	Lever	Levier

Pos.	Art.-Nr Part No. Code	Bezeichnung	Part	Désignation
K330/2	201.877.10	Hauptbremse ABWICKELN	Main brake supply	Frein debiteur
K340/2	201.877.30	Hauptbremse AUFWICKELN	Main brake take up	Frein recepteur
K350/2	201.877.40	Feder	Spring	Ressort
K360/2	201.876.20	Bremshebel SU SOFT BRAKE	Brake lever	Levier de frein
K370/2	201.877.60	Feder	Spring	Ressort
K380/2	201.877.70	Bremshebel TU Softbrake	Lever soft brake	Levier de frein
K390/2	201.879.10	Feder	Spring	Ressort
K410/2	201.879.20	Schieber CAM	Slider cam	Coulisseau
K420/2	201.879.30	Feder	Spring	Ressort
K430/2	201.876.50	Hebel IDLE-UP DOWN	Lever	Levier
K440/2	201.876.60	Hebel IDLE KICK	Lever	Levier
K450/2	201.879.40	Hebel IDLE CENTERING	Lever	Levier
K490/2	201.880.90	Cassettenhalter	Cassette holder	Porte-cassette
K530/2	201.875.40	Antriebsachse kpl. CASS.-SCHACHT	Drive arm asy	Actionnement axe cpl.
K550/2	201.885.20	Zahnrad LEVER DRIVE	Gear	Roue dentee
K562/2	201.885.30	Hebel ARM BRAKE	Lever	Levier
K564/2	201.885.40	Drehfeder	Torsion spring	Ressort de torsion
K570/2	201.885.50	Halter Cassette TOP	Pun bracket top	Support
K590/2	201.887.50	Hebel DOOR OPEN	Lever	Levier
		ELEKTRISCHE TEILE:	**ELECTRICAL PARTS:**	**PIECES ELECTRIQUES:**
V1250SVM		**MB R5H28 LTP. MAIN**	**MB R5H28 P.C.B. MAIN**	**MB R5H28 PLATINE MAIN**
BS031A	101.207.90	Folienkabel 7x1,25mm 150mm wh	FFC-Jumper 7-pole	Ligne de câble, 7pôles
BT002A	101.674.20	Folienkabel 6x1,25mm 124mm wh	FFC-Jumper 6-pole	Ligne de câble, 6pôles
BT003A	101.612.60	Folienkabel 14x1,25mm 150mm wh	FFC-Jumper 14-pole	Ligne de câble, 14pôles
CT043	202.764.60	220MI 5,5V Elko MEMORY	220MI 5,5V E Cap	220MI 5,5V Condens. chimique
DG030,034	160.124.50	LL4148 Diode SMD	LL4148 Diode SMD	LL4148 Diode SMD
DG035	440.092.09	1N4148 Diode	1N4148 Diode	1N4148 Diode
DT001-003	440.088.04	1N4001 Diode	1N4001 Diode	1N4001 Diode
DT006	440.299.01	1N4448 Diode	1N4448 Diode	1N4448 Diode
DT008	440.088.04	1N4001 Diode	1N4001 Diode	1N4001 Diode
DT009	440.357.02	ZPD5,1 2% Z-Diode	ZPD5,1 2% Z-Diode	ZPD5,1 2% Z-Diode
DT010-012	440.088.04	1N4001 Diode	1N4001 Diode	1N4001 Diode
DT013	160.124.50	LL4148 Diode SMD	LL4148 Diode SMD	LL4148 Diode SMD
DT014,015	440.088.04	1N4001 Diode	1N4001 Diode	1N4001 Diode
DT016	440.092.09	1N4148 Diode	1N4148 Diode	1N4148 Diode
DT017,018	440.088.04	1N4001 Diode	1N4001 Diode	1N4001 Diode
DV003,039	508.568.52	LL4448 Diode SMD	LL4448 Diode	LL4448 Diode
DV048,082	508.568.52	LL4448 Diode SMD	LL4448 Diode	LL4448 Diode
DV109,110	440.299.01	1N4448 Diode	1N4448 Diode	1N4448 Diode
DV123	103.775.00	1SS181 Diode SMD	1SS181 Diode	1SS181 Diode
DV163	205.116.80	MTZJ4,7C Z-Diode	MTZJ4,7C Z-Diode	MTZJ4,7C Z-Diode
DV202	508.568.52	LL4448 Diode SMD	LL4448 Diode	LL4448 Diode
DW001	309.486.80	ZPD12 2% Z-Diode	ZPD12 2% Z-Diode	ZPD12 2% Z-Diode
DW002	440.299.01	1N4448 Diode	1N4448 Diode	1N4448 Diode
DW005	440.357.02	ZPD5,1 2% Z-Diode	ZPD5,1 2% Z-Diode	ZPD5,1 2% Z-Diode
DW006	508.568.52	LL4448 Diode SMD	LL4448 Diode	LL4448 Diode
DW007,008	440.088.04	1N4001 Diode	1N4001 Diode	1N4001 Diode
DW013,014	440.088.04	1N4001 Diode	1N4001 Diode	1N4001 Diode
DZ002	160.124.50	LL4148 Diode SMD	LL4148 Diode SMD	LL4148 Diode SMD
DZ004,005	160.124.50	LL4148 Diode SMD	LL4148 Diode SMD	LL4148 Diode SMD
DZ006	440.270.02	ZPD5,6 0,5W 2% Z-Diode	ZPD5,6 0,5W 2% Z-Diode	ZPD5,6 0,5W 2% Z-Diode
FZ051	504.160.00	5,74MHZ Keramikfilter TPW04B	5,74MHZ Ceramic filter	5,74MHZ Filtre ceramique
GT001	202.151.60	HW-300B (F+1/2E) Hall Sensor	HW-300B Hall Sensor	HW-300B Hall Palpeur
GT002	106.272.00	GL451V IR-Diode	GL451V IR-Diode	GL451V IR-Diode
GT003,004	101.376.70	GP1S562 Photo Coupler	GP1S562 Photo Coupler	GP1S562 Photo Coupler
GT005,006	307.442.00	PT493F PH-Transistor	PT493F PH-Transistor	PT493F PH-Transistor
IT001	206.280.60	TMP90CS74DF-7904 C5T IC	TMP90CS74DF-7904 C5T IC	TMP90CS74DF-7904 C5T CI
IT002	202.647.60	TA7291S IC	TA7291S IC	TA7291S CI
IT003	202.577.60	TB6515AP IC	TB6515AP IC	TB6515AP CI
IT004	203.168.70	ST24C08/CB1 IC	ST24C08/CB1 IC	ST24C08/CB1 CI
IT005	202.504.10	PST7032MT IC	PST7032MT IC	PST7032MT CI
IV001	205.424.50	LA7447B IC	LA7447B IC	LA7447B CI
IV060	203.416.30	LC89970M-SK IC	LC89970M-SK IC	LC89970M-SK CI
IV120	701.300.00	74HC4053 IC FLAT	74HC4053 IC	74HC4053 CI
IV160	404.404.40	BA7046 IC	BA7046 IC	BA7046 CI
IV170,171	200.160.20	MC14094/BD IC	MC14094/BD IC	MC14094/BD CI
IY001	101.443.30	SDA5648X IC	SDA5648X IC	SDA5648X CI
LS030	200.185.60	Bias Oszillator Spule	Bias Oscillator Coil	Bias Bobine Oscillatrice

Pos.	Art.-Nr Part No. Code	Bezeichnung	Part	Désignation
MT001	101.505.60	Statorkern TTN4	Stator core TTN4	Stator core TTN4
PS034	420.491.00	33K 30% 0,1W Potentiometer V	33K Potentiometer	33K Potentiometre
QT001	203.258.40	17,734475MHZ Quarz	17,734475MHZ Crystal	17,734475MHZ Quartz
QT002	480.796.00	32,768KHZ Quarz	32,768KHZ Crystal	32,768KHZ Quartz
QT003	202.647.70	16MHZ Quarz	16MHZ Crystal	16MHZ Quartz
QV028	200.723.60	4,433619MHZ Quarz	4,433619MHZ Crystal	4,433619MHZ Quartz
RS045	150.096.60 S	18R 0,3W 5% Sicherheitswiderstand	18R 0,3W 5% Fusible resistor	18R 0,3W 5% Resistance fusible
RT089	410.226.09 S	1R 0,3W 5% Sicherheitswiderstand	1R 0,3W 5% Fusible resistor	1R 0,3W 5% Resistance fusible
RW012	410.555.09 S	56R 0,3W 5% Sicherheitswiderstand	56R 0,3W 5% Fusible resistor	56R 0,3W 5% Résistance fusible
RW021	410.226.09 S	1R 0,3W 5% Sicherheitswiderstand	1R 0,3W 5% Fusible resistor	1R 0,3W 5% Resistance fusible
RW029	204.897.90 S	R510 1W +5% Metallfilmwiderstand	R510 1W +5% Metal film resistor	R510 1W +5% Resistance metall.
ST001	101.376.10	SPPB62 Druckschalter	SPPB62 Push switch	SPPB62 Commutateur poussoir
TG029,030	109.662.00	RN1402 (TE85L/R) Transistor SSD	RN1402 (TE85L/R) Transistor	RN1402 (TE85L/R) Transistor
TG031	450.539.85	BC858B SMD-TRANSISTOR 10ER-PACK	BC858/B Transistor	BC858/B Transistor
TS030	202.475.50	2SC2859Y Transistor SMD	2SC2859Y Transistor	2SC2859Y Transistor
TS039	450.617.85	BC848/B Transistor SMD	BC848/B Transistor	BC848/B Transistor
TS119	109.662.00	RN1402 (TE85L/R) Transistor SSD	RN1402 (TE85L/R) Transistor	RN1402 (TE85L/R) Transistor
TT001,002	703.818.00	RN1404 (TE85L/R) Transistor SSD	RN1404 (TE85L/R) Transistor	RN1404 (TE85L/R) Transistor
TT003	450.617.85	BC848/B Transistor SMD	BC848/B Transistor	BC848/B Transistor
TT005	160.037.40	2SA1020Y Transistor	2SA1020Y Transistor	2SA1020Y Transistor
TT006	450.617.85	BC848/B Transistor SMD	BC848/B Transistor	BC848/B Transistor
TT010	450.014.66	BC337-40 Transistor	BC337-40 Transistor	BC337-40 Transistor
TT011,012	204.381.66	BC848/C Transistor SMD	BC848/C Transistor	BC848/C Transistor
TT013	450.539.85	BC858B SMD-TRANSISTOR 10ER-PACK	BC858/B Transistor	BC858/B Transistor
TV002	109.662.00	RN1402 (TE85L/R) Transistor SSD	RN1402 (TE85L/R) Transistor	RN1402 (TE85L/R) Transistor
TV003,006	450.617.85	BC848/B Transistor SMD	BC848/B Transistor	BC848/B Transistor
TV011	450.539.85	BC858B SMD-TRANSISTOR 10ER-PACK	BC858/B Transistor	BC858/B Transistor
TV028	450.617.85	BC848/B Transistor SMD	BC848/B Transistor	BC848/B Transistor
TV047	450.539.85	BC858B SMD-TRANSISTOR 10ER-PACK	BC858/B Transistor	BC858/B Transistor
TV055	450.617.85	BC848/B Transistor SMD	BC848/B Transistor	BC848/B Transistor
TV103	109.662.00	RN1402 (TE85L/R) Transistor SSD	RN1402 (TE85L/R) Transistor	RN1402 (TE85L/R) Transistor
TV127	450.539.85	BC858B SMD-TRANSISTOR 10ER-PACK	BC858/B Transistor	BC858/B Transistor
TV130,135	450.617.85	BC848/B Transistor SMD	BC848/B Transistor	BC848/B Transistor
TV140,141	450.617.85	BC848/B Transistor SMD	BC848/B Transistor	BC848/B Transistor
TV143	450.539.85	BC858B SMD-TRANSISTOR 10ER-PACK	BC858/B Transistor	BC858/B Transistor
TV145,147	450.617.85	BC848/B Transistor SMD	BC848/B Transistor	BC848/B Transistor
TV149	450.539.85	BC858B SMD-TRANSISTOR 10ER-PACK	BC858/B Transistor	BC858/B Transistor
TV154	450.617.85	BC848/B Transistor SMD	BC848/B Transistor	BC848/B Transistor
TV164,170	109.662.00	RN1402 (TE85L/R) Transistor SSD	RN1402 (TE85L/R) Transistor	RN1402 (TE85L/R) Transistor
TV171	160.011.10	BC558B Transistor	BC558B Transistor	BC558B Transistor
TV188	204.381.66	BC848/C Transistor SMD	BC848/C Transistor	BC848/C Transistor
TV200,201	450.617.85	BC848/B Transistor SMD	BC848/B Transistor	BC848/B Transistor
TV223	450.617.85	BC848/B Transistor SMD	BC848/B Transistor	BC848/B Transistor
TV227	450.617.85	BC848/B Transistor SMD	BC848/B Transistor	BC848/B Transistor
TV243	450.539.85	BC858B SMD-TRANSISTOR 10ER-PACK	BC858/B Transistor	BC858/B Transistor
TV248	450.617.85	BC848/B Transistor SMD	BC848/B Transistor	BC848/B Transistor
TV250,251	450.617.85	BC848/B Transistor SMD	BC848/B Transistor	BC848/B Transistor
TW001	204.381.66	BC848/C Transistor SMD	BC848/C Transistor	BC848/C Transistor
TW002	508.354.00	RN2403 Transistor SSD	RN2403 Transistor	RN2403 Transistor
TW003,005	603.908.00	2SC2236-Y Transistor	2SC2236-Y Transistor	2SC2236-Y Transistor
TW006	450.539.85	BC858B SMD-TRANSISTOR 10ER-PACK	BC858/B Transistor	BC858/B Transistor
TW009	403.834.00	RN1405 Transistor SSD	RN1405 Transistor	RN1405 Transistor
TZ001	109.662.00	RN1402 (TE85L/R) Transistor SSD	RN1402 (TE85L/R) Transistor	RN1402 (TE85L/R) Transistor
TZ019	109.662.00	RN1402 (TE85L/R) Transistor SSD	RN1402 (TE85L/R) Transistor	RN1402 (TE85L/R) Transistor
TZ031	450.617.85	BC848/B Transistor SMD	BC848/B Transistor	BC848/B Transistor
TZ032	450.539.85	BC858B SMD-TRANSISTOR 10ER-PACK	BC858/B Transistor	BC858/B Transistor
TZ033	603.908.00	2SC2236-Y Transistor	2SC2236-Y Transistor	2SC2236-Y Transistor
TZ050	450.617.85	BC848/B Transistor SMD	BC848/B Transistor	BC848/B Transistor
TZ051	508.546.83	BC858/C Transistor SMD	BC858/C Transistor	BC858/C Transistor
TZ057	450.539.85	BC858B SMD-TRANSISTOR 10ER-PACK	BC858/B Transistor	BC858/B Transistor
V1250SVM		**TMB R5T10 TERMINAL BOARD KPL**	**TMB R5T10 PCB. ASSY**	**TMB R5T10 PLATINE EQ**
BX205	600.689.00	Buchse Euro AV BK2093 SCART	Scart socket	Prise femelle peritelevision
BX206	102.517.20	Buchse Euro AV BU2093 SCART	Scart socket	Prise femelle peritelevision
IS001	101.220.10	BA7795LS IC	BA7795LS IC	BA7795LS CI
IX020	110.079.92	HEF4052/BT IC SMD	HEF4052/BT IC	HEF4052/BT CI
IX040	202.303.00	HEF4053/BT IC	HEF4053/BT IC	HEF4053/BT CI
IX201	101.066.70	STV6400 IC	STV6400 IC	STV6400 CI
TS040	703.818.00	RN1404 (TE85L/R) Transistor SSD	RN1404 (TE85L/R) Transistor	RN1404 (TE85L/R) Transistor
TS045	109.662.00	RN1402 (TE85L/R) Transistor SSD	RN1402 (TE85L/R) Transistor	RN1402 (TE85L/R) Transistor
TX013	703.828.00	2SC2712Y-R Transistor SMD	2SC2712Y-R Transistor	2SC2712Y-R Transistor
TX050,070	703.828.00	2SC2712Y-R Transistor SMD	2SC2712Y-R Transistor	2SC2712Y-R Transistor
TX200	450.617.85	BC848/B Transistor SMD	BC848/B Transistor	BC848/B Transistor

Pos.	Art.-Nr Part No. Code	Bezeichnung	Part	Désignation
V1250SVM		**KDB R5AL1 LTP. KDB**	**KDB R5AL1 P.C.B. KDB**	**KDB R5AL1 P.KDB**
DK066	905.665.20	ZMM4,7 Z-Diode SMD	ZMM4,7 Z-Diode	ZMM4,7 Z-Diode
GKF01	200.812.40	Fluoreszenzanzeige/Display 11-MT-83GK	Fluorescent display panel	Affichage
IK001	206.280.80	TMP87CS71F-6487 R5-N5T IC FLAT	TMP87CS71F-6487 R5-N5T IC	TMP87CS71F-6487 R5-N5T CI
QK001	100.654.00	8MHZ Resonator	8MHZ Resonator	8MHZ Quartz
SK001-008	204.045.10	Mikroschalter	Micro switch	Micro-contacteur
ZK001	804.444.80	GP1U583X IC-Vorverstärker	GP1U583X IC Infrared receiver	GP1U583X CI Recept. infrar.
V1450SVM		**MB R5H29 LTP. MAIN**	**MB R5H29 P.C.B. MAIN**	**MB R5H29 PLATINE MAIN**
DV029	508.568.52	LL4448 Diode SMD	LL4448 Diode	LL4448 Diode
DV126-128	508.568.52	LL4448 Diode SMD	LL4448 Diode	LL4448 Diode
DV182,186	508.568.52	LL4448 Diode SMD	LL4448 Diode	LL4448 Diode
IT001	206.280.60	TMP90CS74DF-7904 C5T IC	TMP90CS74DF-7904 C5T IC	TMP90CS74DF-7904 C5T CI
TN430	202.475.50	2SC2859Y Transistor SMD	2SC2859Y Transistor	2SC2859Y Transistor
TN439	450.617.85	BC848/B Transistor SMD	BC848/B Transistor	BC848/B Transistor
TV126	202.058.00	RN2402 Transistor SSD	RN2402 Transistor	RN2402 Transistor
TV186	109.662.00	RN1402 (TE85L/R) Transistor SSD	RN1402 (TE85L/R) Transistor	RN1402 (TE85L/R) Transistor
TV187	450.617.85	BC848/B Transistor SMD	BC848/B Transistor	BC848/B Transistor
TV225	109.662.00	RN1402 (TE85L/R) Transistor SSD	RN1402 (TE85L/R) Transistor	RN1402 (TE85L/R) Transistor
V1450SVM		**TMB R5T10 TERMINAL BOARD KPL**	**TMB R5T10 PCB. ASSY**	**TMB R5T10 PLATINE EQ**
V1450SVM		**KDB R5AL1 LTP. KDB**	**KDB R5AL1 P.C.B. KDB**	**KDB R5AL1 P.KDB**
IK001	206.280.80	TMP87CS71F-6487 R5-N5T IC FLAT	TMP87CS71F-6487 R5-N5T IC	TMP87CS71F-6487 R5-N5T CI
SK001-008	204.045.10	Mikroschalter	Micro switch	Micro-contacteur
ZK001	804.444.80	GP1U583X IC-Vorverstärker	GP1U583X IC Infrared receiver	GP1U583X CI Recept. infrar.
V1455SEN		**MB R5H8 LTP. MAIN**	**MB R5H8 P.C.B. MAIN**	**MB R5H8 PLATINE MAIN**
DV003	440.299.01	1N4448 Diode	1N4448 Diode	1N4448 Diode
DV029	508.568.52	LL4448 Diode SMD	LL4448 Diode	LL4448 Diode
DV126	508.568.52	LL4448 Diode SMD	LL4448 Diode	LL4448 Diode
DV182,186	508.568.52	LL4448 Diode SMD	LL4448 Diode	LL4448 Diode
DZ001	704.467.40	ZMM5,1 2% Z-Diode SMD	ZMM5,1 2% Z-Diode	ZMM5,1 2% Z-Diode
GT005,006	804.075.70	NM5 PT493F PH-Transistor	NM5 PT493F PH-Transistor	NM5 PT493F PH-Transistor
IT001	205.406.50	TMP90CR74ADF R5-B4T IC FLAT	TMP90CR74ADF R5-B4T IC	TMP90CR74ADF R5-B4T CI
LN430	203.985.30	Bias Oszillator Spule 2213	Bias oscillator coil	Bias Bobine oscillatrice
LS030	204.679.10	Bias Oszillator Spule 70KHZ	Bias oscillator coil	Bias Bobine oscillatrice
PT001	433.875.00	4P2 20P Trimmer	4P2 20P Trimmer	4P2 20P C AJ
RW012	150.098.40 S	27R 0,3W 5% Sicherheitswiderstand	27R 0,3W 5% Fusible resistor	27R 0,3W 5% Résistance fusible
RW021	410.985.09 S	5R6 0,3W 5% Sicherheitswiderstand	5R6 0,3W 5% Fusible resistor	5R6 0,3W 5% Resistance fusible
TG031	160.063.30	BC858B Transistor SMD	BC858B Transistor	BC858B Transistor
TN430	202.475.50	2SC2859Y Transistor SMD	2SC2859Y Transistor	2SC2859Y Transistor
TN439	450.617.85	BC848/B Transistor SMD	BC848/B Transistor	BC848/B Transistor
TT004	202.448.30	2SA1162GR Transistor SMD	2SA1162GR Transistor	2SA1162GR Transistor
TV011	160.063.30	BC858B Transistor SMD	BC858B Transistor	BC858B Transistor
TV047	160.063.30	BC858B Transistor SMD	BC858B Transistor	BC858B Transistor
TV126	202.058.00	RN2402 Transistor SSD	RN2402 Transistor	RN2402 Transistor
TV143	160.063.30	BC858B Transistor SMD	BC858B Transistor	BC858B Transistor
TV149	160.063.30	BC858B Transistor SMD	BC858B Transistor	BC858B Transistor
TV186	109.662.00	RN1402 (TE85L/R) Transistor SSD	RN1402 (TE85L/R) Transistor	RN1402 (TE85L/R) Transistor
TV187	450.617.85	BC848/B Transistor SMD	BC848/B Transistor	BC848/B Transistor
TV225	109.662.00	RN1402 (TE85L/R) Transistor SSD	RN1402 (TE85L/R) Transistor	RN1402 (TE85L/R) Transistor
TV243	160.063.30	BC858B Transistor SMD	BC858B Transistor	BC858B Transistor
TW006	160.063.30	BC858B Transistor SMD	BC858B Transistor	BC858B Transistor
TW010	160.063.30	BC858B Transistor SMD	BC858B Transistor	BC858B Transistor
TW011	403.834.00	RN1405 Transistor SSD	RN1405 Transistor	RN1405 Transistor
V1455SEN		**TMB R5T13 TERMINAL BOARD**	**TMB R5T13 P.C.B.**	**TMB R5T13 PLATINE**
V1455SEN		**FEATURE R5G1 BOARD**	**FEATURE R5G1 P.C.B.**	**FEATURE R5G1 PLATINE**
DF201	704.467.40	ZMM5,1 2% Z-Diode SMD	ZMM5,1 2% Z-Diode	ZMM5,1 2% Z-Diode
DF202	508.568.52	LL4448 Diode SMD	LL4448 Diode	LL4448 Diode
DF205,206	160.124.50	LL4148 Diode SMD	LL4148 Diode SMD	LL4148 Diode SMD
FF201	480.531.00 S	630MIA Sicherung (Topfsicherung)	630MIA Fuse	630MIA Fusible

Pos.	Art.-Nr Part No. Code	Bezeichnung	Part	Désignation
IF201	101.161.30	ST90R91BC1 IC	ST90R91BC1 IC	ST90R91BC1 CI
IF201A	103.442.00	IC-Fassung 68polig	IC socket 68pole	Support CI 68 voles
IF202	101.161.20	SDA5273 IC	SDA5273 IC	SDA5273 CI
IF203	205.413.60	UPD23C4001EBCZ IC MEMORY	UPD23C4001EBCZ IC	UPD23C4001EBCZ CI
IF204	202.303.00	HEF4053/BT IC	HEF4053/BT IC	HEF4053/BT CI
IF207	404.041.16	TEA5114A2 IC	IC, TEA5114/A2	CI, TEA5114/A2
IF208	202.303.00	HEF4053/BT IC	HEF4053/BT IC	HEF4053/BT CI
QF201	110.087.17	24MHZ Keramikfilter	24MHZ Ceramic filter	24MHZ Filtre ceramique
QF202	502.368.00	20,48MHZ Keramikfilter	20,48MHZ Ceramic filter	20,48MHZ Filtre ceramique
TF201	603.908.00	2SC2236-Y Transistor	2SC2236-Y Transistor	2SC2236-Y Transistor
TF202	160.063.30	BC858B Transistor SMD	BC858B Transistor	BC858B Transistor
TF203	109.662.00	RN1402 (TE85L/R) Transistor SSD	RN1402 (TE85L/R) Transistor	RN1402 (TE85L/R) Transistor
TF204	160.063.30	BC858B Transistor SMD	BC858B Transistor	BC858B Transistor
TF205	450.617.85	BC848/B Transistor SMD	BC848/B Transistor	BC848/B Transistor
TF208	160.063.30	BC858B Transistor SMD	BC858B Transistor	BC858B Transistor
TF210-213	450.617.85	BC848/B Transistor SMD	BC848/B Transistor	BC848/B Transistor
TF220	450.617.85	BC848/B Transistor SMD	BC848/B Transistor	BC848/B Transistor
V1455SEN		**KDB R5BV1 LTP.KEY-DISPLAY**	**KDB R5BV1 P.C.B.KEY-DISPLAY**	**KDB R5BV1 P.KEY-DISPLAY**
DJ425	160.124.50	LL4148 Diode SMD	LL4148 Diode SMD	LL4148 Diode SMD
DK280	160.124.50	LL4148 Diode SMD	LL4148 Diode SMD	LL4148 Diode SMD
GK202-204	202.686.00	TSIP5201 IR-Diode	TSIP5201 IR-Diode	TSIP5201 IR-Diode
IK001	205.042.50	TMP87CP71F-R5-L5 IC	TMP87CP71F-R5-L5 IC	TMP87CP71F-R5-L5 CI
PK404	401.109.00	Buchse Kopfhörer 3,5mm HSJ1406-01-020	Headphone socket	Prise casque femelle
TK206	803.888.00	2SA1162Y-R Transistor SMD	2SA1162Y-R Transistor	2SA1162Y-R Transistor
TK280	450.014.66	BC337-40 Transistor	BC337-40 Transistor	BC337-40 Transistor
ZK001	201.309.10	TFMT5330 IC IR Empfänger	TFMT5330 IC Infrared receiver	TFMT5330 CI Recept. infrar.
V1455SEN		**FCB R5BV1 LTP.FRONT**	**FCB R5BV1 PCB JACK**	**FCB R5BV1 PLATINE PRISE**
PK701	204.838.20	Buchse Cinch JPJ2022-01-040	Cinch socket	Prise cinch femelle
PK702	309.300.90	Buchse Cinch JPJ2022-01-030 WH	Cinch socket	Prise cinch femelle
SK001,004	203.459.10	Taktschalter	Tact switch	Interrupteur de cadence
SK007,008	203.459.10	Taktschalter	Tact switch	Interrupteur de cadence
V1455SEN		**JSB R5BV1 LTP.JOG SHUTTLE**	**JSB R5BV1 PCB JOG SHUTTLE**	**JSB R5BV1 PL. JOG SHUTTLE**
SKS01	202.145.90	Schalter Jog Shuttle SRGPHJ080A	Switch Jog Shuttle	Contacteur Jog Shuttle
VR7021		**MB R5H206 LTP. MAIN**	**MB R5H206 P.C.B. MAIN**	**MB R5H206 PLATINE MAIN**
IT001	206.374.90	TMP90CS74DF C1S-1 IC	TMP90CS74DF C1S-1 IC	TMP90CS74DF C1S-1 CI
IT004	100.303.00	ST24C04/B1 IC SELBSTPROGR.	ST24C04/B1 IC	ST24C04/B1 CI
IY001	101.443.30	SDA5648X IC	SDA5648X IC	SDA5648X CI
LS030	200.185.60	Bias Oszillator Spule	Bias Oscillator Coil	Bias Bobine Oscillatrice
PS034	420.491.00	33K 30% 0,1W Potentiometer V	33K Potentiometer	33K Potentiometre
QT001	203.258.40	17,734475MHZ Quarz	17,734475MHZ Crystal	17,734475MHZ Quartz
QV028	202.647.70	16MHZ Quarz	16MHZ Crystal	16MHZ Quartz
RW012	410.555.09 S	56R 0,3W 5% Sicherheitswiderstand	56R 0,3W 5% Fusible resistor	56R 0,3W 5% Résistance fusible
RW021	410.226.09 S	1R 0,3W 5% Sicherheitswiderstand	1R 0,3W 5% Fusible resistor	1R 0,3W 5% Resistance fusible
VR7021		**TMB R5T10 TERMINAL BOARD KPL**	**TMB R5T10 PCB. ASSY**	**TMB R5T10 PLATINE EQ**
BX205	600.689.00	Buchse Euro AV BK2093 SCART	Scart socket	Prise femelle peritelevision
BX206	102.517.20	Buchse Euro AV BU2093 SCART	Scart socket	Prise femelle peritelevision
IS001	101.220.10	BA7795LS IC	BA7795LS IC	BA7795LS CI
IX020	110.079.92	HEF4052/BT IC SMD	HEF4052/BT IC	HEF4052/BT CI
IX040	202.303.00	HEF4053/BT IC	HEF4053/BT IC	HEF4053/BT CI
IX201	101.066.70	STV6400 IC	STV6400 IC	STV6400 CI
TS040	703.818.00	RN1404 (TE85L/R) Transistor SSD	RN1404 (TE85L/R) Transistor	RN1404 (TE85L/R) Transistor
TS045	109.662.00	RN1402 (TE85L/R) Transistor SSD	RN1402 (TE85L/R) Transistor	RN1402 (TE85L/R) Transistor
TX013	703.828.00	2SC2712Y-R Transistor SMD	2SC2712Y-R Transistor	2SC2712Y-R Transistor
TX050,070	703.828.00	2SC2712Y-R Transistor SMD	2SC2712Y-R Transistor	2SC2712Y-R Transistor
TX200	450.617.85	BC848/B Transistor SMD	BC848/B Transistor	BC848/B Transistor
TX213	160.009.00	BC547C Transistor	BC547C Transistor	BC547C Transistor

Pos.	Art.-Nr Part No. Code	Bezeichnung	Part
VR7021		**KDB R5BP1 LTP. KDB**	**KDB R5BP1 P.C.B. KDB**
GK001	202.962.10	LS3369FH Diode S-ROT LED	LS3369FH Diode S-RED LE
GKC03	206.097.80	Lampe 100MA 14V	Lamp 100MA 14V
IK001	206.282.40	TMP47C422F-FR57 96-N1S IC FLAT	TMP47C422F-FR57 IC
QK001	100.654.00	8MHZ Resonator	8MHZ Resonator
SK001,002	203.459.10	Taktschalter	Tact switch
SK005-008	203.459.10	Taktschalter	Tact switch
SK010,012	203.459.10	Taktschalter	Tact switch
TJ028	450.539.85	BC858B SMD-TRANSISTOR 10ER-PACK	BC858/B Transistor
TKC29	450.014.66	BC337-40 Transistor	BC337-40 Transistor
TLC29	450.617.85	BC848/B Transistor SMD	BC848/B Transistor
ZK001	203.840.40	GP1U283X IC IR Empfänger	GP1U283X IC Infrared rec
VR7041		**MB R5H207 LTP. MAIN**	**MB R5H207 P.C.B. MAIN**
DZ006	440.270.02	ZPD5,6 0,5W 2% Z-Diode	ZPD5,6 0,5W 2% Z-Diode
GK001	202.962.10	LS3369FH Diode S-ROT LED	LS3369FH Diode S-RED L
GKC03	206.097.80	Lampe 100MA 14V	Lamp 100MA 14V
IT001	206.374.90	TMP90CS74DF C1S-1 IC	TMP90CS74DF C1S-1 IC
IT004	100.303.00	ST24C04/B1 IC SELBSTPROGR.	ST24C04/B1 IC
IY001	101.443.30	SDA5648X IC	SDA5648X IC
LS030	200.185.60	Bias Oszillator Spule	Bias Oscillator Coil
PS034	420.491.00	33K 30% 0,1W Potentiometer V	33K Potentiometer
QT001	203.258.40	17,734475MHZ Quarz	17,734475MHZ Crystal
QT003	202.647.70	16MHZ Quarz	16MHZ Crystal
M9523		**TMB R5T10 TERMINAL BOARD KPL**	**TMB R5T10 PCB. ASSY**
BX205	600.689.00	Buchse Euro AV BK2093 SCART	Scart socket
BX206	102.517.20	Buchse Euro AV BU2093 SCART	Scart socket
IS001	101.220.10	BA7795LS IC	BA7795LS IC
IX020	110.079.92	HEF4052/BT IC SMD	HEF4052/BT IC
IX040	202.303.00	HEF4053/BT IC	HEF4053/BT IC
IX201	101.066.70	STV6400 IC	STV6400 IC
TS040	703.818.00	RN1404 (TE85L/R) Transistor SSD	RN1404 (TE85L/R) Trans
TS045	109.662.00	RN1402 (TE85L/R) Transistor SSD	RN1402 (TE85L/R) Trans
TX013	703.828.00	2SC2712Y-R Transistor SMD	2SC2712Y-R Transistor
TX050,070	703.828.00	2SC2712Y-R Transistor SMD	2SC2712Y-R Transistor
TX200	450.617.85	BC848/B Transistor SMD	BC848/B Transistor
M9523		**SECAM MODUL R5A2 LTP.**	**SECAM MODULE R5A2 P.**
DC121,146	508.568.52	LL4448 Diode SMD	LL4448 Diode
FC133	204.031.90	TCV-2209P LC-Modul	TCV-2209P LC Module
IC100	205.680.80	BA7207AS IC	BA7207AS IC
PC103,104	420.413.00	2K2 Potentiometer	2K2 Potentiometer

Pos.	Art.-Nr Part No. Code	Bezeichnung	Part
VR7041		**KDB R5BP1 LTP. KDB**	**KDB R5BP1 P.C.B. KDB**
GK001	202.962.10	LS3369FH Diode S-ROT LED	LS3369FH Diode S-RED LE
GKC03	206.097.80	Lampe 100MA 14V	Lamp 100MA 14V
IK001	206.282.40	TMP47C422F-FR57 96-N1S IC FLAT	TMP47C422F-FR57 IC
QK001	100.654.00	8MHZ Resonator	8MHZ Resonator
SK001,002	203.459.10	Taktschalter	Tact switch
SK005-008	203.459.10	Taktschalter	Tact switch
SK010,012	203.459.10	Taktschalter	Tact switch
TJ028	450.539.85	BC858B SMD-TRANSISTOR 10ER-PACK	BC858/B Transistor
TKC29	450.014.66	BC337-40 Transistor	BC337-40 Transistor
TLC29	450.617.85	BC848/B Transistor SMD	BC848/B Transistor
ZK001	203.840.40	GP1U283X IC IR Empfänger	GP1U283X IC Infrared rec
VR7041		**MB R5H207 LTP. MAIN**	**MB R5H207 P.C.B. MAIN**
DZ006	440.270.02	ZPD5,6 0,5W 2% Z-Diode	ZPD5,6 0,5W 2% Z-Diode
GK001	202.962.10	LS3369FH Diode S-ROT LED	LS3369FH Diode S-RED L
GKC03	206.097.80	Lampe 100MA 14V	Lamp 100MA 14V
IT001	206.374.90	TMP90CS74DF C1S-1 IC	TMP90CS74DF C1S-1 IC
IT004	100.303.00	ST24C04/B1 IC SELBSTPROGR.	ST24C04/B1 IC
IY001	101.443.30	SDA5648X IC	SDA5648X IC
LS030	200.185.60	Bias Oszillator Spule	Bias Oscillator Coil
PS034	420.491.00	33K 30% 0,1W Potentiometer V	33K Potentiometer
QT001	203.258.40	17,734475MHZ Quarz	17,734475MHZ Crystal
QT003	202.647.70	16MHZ Quarz	16MHZ Crystal
M9523		**TMB R5T10 TERMINAL BOARD KPL**	**TMB R5T10 PCB. ASSY**
BX205	600.689.00	Buchse Euro AV BK2093 SCART	Scart socket
BX206	102.517.20	Buchse Euro AV BU2093 SCART	Scart socket
IS001	101.220.10	BA7795LS IC	BA7795LS IC
IX020	110.079.92	HEF4052/BT IC SMD	HEF4052/BT IC
IX040	202.303.00	HEF4053/BT IC	HEF4053/BT IC
IX201	101.066.70	STV6400 IC	STV6400 IC
TS040	703.818.00	RN1404 (TE85L/R) Transistor SSD	RN1404 (TE85L/R) Trans
TS045	109.662.00	RN1402 (TE85L/R) Transistor SSD	RN1402 (TE85L/R) Trans
TX013	703.828.00	2SC2712Y-R Transistor SMD	2SC2712Y-R Transistor
TX050,070	703.828.00	2SC2712Y-R Transistor SMD	2SC2712Y-R Transistor
TX200	450.617.85	BC848/B Transistor SMD	BC848/B Transistor
VR7041		**TMB R5T10 TERMINAL BOARD KPL**	**TMB R5T10 PCB. ASSY**
VR7041		**KDB R5BP1 LTP. KDB**	**KDB R5BP1 P.C.B. KDB**
IK001	206.282.40	TMP47C422F-FR57 96-N1S IC FLAT	TMP47C422F-FR57 IC
M9523		**MB R5H213 LTP. MAIN KPL**	**MB R5H213 P.C.B. MAIN A**
DZ006	440.357.02	ZPD5,1 2% Z-Diode	ZPD5,1 2% Z-Diode
IT001	205.687.80	TMP90CS74DF-7827 C1TK IC	TMP90CS74DF-7827 C1T
IT004	100.303.00	ST24C04/B1 IC SELBSTPROGR.	ST24C04/B1 IC
IV100	203.375.90	LA7356M IC	LA7356M IC
IY001	101.443.30	SDA5648X IC	SDA5648X IC
LS030	200.185.60	Bias Oszillator Spule	Bias Oscillator Coil
PS034	420.491.00	33K 30% 0,1W Potentiometer V	33K Potentiometer
QT001	203.258.40	17,734475MHZ Quarz	17,734475MHZ Crystal
QT003	202.647.70	16MHZ Quarz	16MHZ Crystal
M9523		**TMB R5T10 TERMINAL BOARD KPL**	**TMB R5T10 PCB. ASSY**
BX205	600.689.00	Buchse Euro AV BK2093 SCART	Scart socket
BX206	102.517.20	Buchse Euro AV BU2093 SCART	Scart socket
IS001	101.220.10	BA7795LS IC	BA7795LS IC
IX020	110.079.92	HEF4052/BT IC SMD	HEF4052/BT IC
IX040	202.303.00	HEF4053/BT IC	HEF4053/BT IC
IX201	101.066.70	STV6400 IC	STV6400 IC
TS040	703.818.00	RN1404 (TE85L/R) Transistor SSD	RN1404 (TE85L/R) Trans
TS045	109.662.00	RN1402 (TE85L/R) Transistor SSD	RN1402 (TE85L/R) Trans
TX013	703.828.00	2SC2712Y-R Transistor SMD	2SC2712Y-R Transistor
TX050,070	703.828.00	2SC2712Y-R Transistor SMD	2SC2712Y-R Transistor
TX200	450.617.85	BC848/B Transistor SMD	BC848/B Transistor
M9523		**SECAM MODUL R5A2 LTP.**	**SECAM MODULE R5A2 P.**
DC121,146	508.568.52	LL4448 Diode SMD	LL4448 Diode
FC133	204.031.90	TCV-2209P LC-Modul	TCV-2209P LC Module
IC100	205.680.80	BA7207AS IC	BA7207AS IC
PC103,104	420.413.00	2K2 Potentiometer	2K2 Potentiometer

	Part	Désignation
'P. KDB	**KDB R5BP1 P.C.B. KDB**	**KDB R5BP1 P.KDB**
ıde S-ROT LED 14V	LS3369FH Diode S-RED LED Lamp 100MA 14V	LS3369FH Diode S-ROUGE LED Ampoule 100MA 14V
-FR57 96-N1S IC FLAT	TMP47C422F-FR57 IC	TMP47C422F-FR57 CI
tor	8MHZ Resonator	8MHZ Quartz
	Tact switch Tact switch Tact switch	Interrupteur de cadence Interrupteur de cadence Interrupteur de cadence
-TRANSISTOR 10ER-PACK nsistor ısistor SMD	BC858/B Transistor BC337-40 Transistor BC848/B Transistor	BC858/B Transistor BC337-40 Transistor BC848/B Transistor
: IR Empfänger	GP1U283X IC Infrared receiver	GP1U283X CI Recept. infrar
TP. MAIN	**MB R5H207 P.C.B. MAIN**	**MB R5H207 PLATINE MAIN**
2% Z-Diode	ZPD5,6 0,5W 2% Z-Diode	ZPD5,6 0,5W 2% Z-Diode
ode S-ROT LED A 14V	LS3369FH Diode S-RED LED Lamp 100MA 14V	LS3369FH Diode S-ROUGE LED Ampoule 100MA 14V
)F C1S-1 IC IC SELBSTPROGR. :	TMP90CS74DF C1S-1 IC ST24C04/B1 IC SDA5648X IC	TMP90CS74DF C1S-1 CI ST24C04/B1 CI SDA5648X CI
ır Spule	Bias Oscillator Coil	Bias Bobine Oscillatrice
W Potentiometer V	33K Potentiometer	33K Potentiometre
HZ Quarz rz	17,734475MHZ Crystal 16MHZ Crystal	17,734475MHZ Quartz 16MHZ Quartz
; Sicherheitswiderstand Sicherheitswiderstand	56R 0,3W 5% Fusible resistor 1R 0,3W 5% Fusible resistor	56R 0,3W 5% Résistance fusible 1R 0,3W 5% Resistance fusible
TERMINAL BOARD KPL	**TMB R5T10 PCB. ASSY**	**TMB R5T10 PLATINE EQ**
LTP. KDB	**KDB R5BP1 P.C.B. KDB**	**KDB R5BP1 P.KDB**
:-FR57 96-N1S IC FLAT	TMP47C422F-FR57 IC	TMP47C422F-FR57 CI
LTP. MAIN KPL	**MB R5H213 P.C.B. MAIN ASSY**	**MB R5H213 PLATINE MAIN EQ**
Z-Diode	ZPD5,1 2% Z-Diode	ZPD5,1 2% Z-Diode
DF-7827 C1TK IC IC SELBSTPROGR. C	TMP90CS74DF-7827 C1TK IC ST24C04/B1 IC LA7356M IC SDA5648X IC	TMP90CS74DF-7827 C1TK CI ST24C04/B1 CI LA7356M CI SDA5648X CI
or Spule	Bias Oscillator Coil	Bias Bobine Oscillatrice
W Potentiometer V	33K Potentiometer	33K Potentiometre
HZ Quarz rz	17,734475MHZ Crystal 16MHZ Crystal	17,734475MHZ Quartz 16MHZ Quartz
TERMINAL BOARD KPL	**TMB R5T10 PCB. ASSY**	**TMB R5T10 PLATINE EQ**
) AV BK2093 SCART) AV BU2093 SCART	Scart socket Scart socket	Prise femelle peritelevision Prise femelle peritelevision
C T IC SMD T IC	BA7795LS IC HEF4052/BT IC HEF4053/BT IC STV6400 IC	BA7795LS CI HEF4052/BT CI HEF4053/BT CI STV6400 CI
:85L/R) Transistor SSD :85L/R) Transistor SSD R Transistor SMD R Transistor SMD ansistor SMD	RN1404 (TE85L/R) Transistor RN1402 (TE85L/R) Transistor 2SC2712Y-R Transistor 2SC2712Y-R Transistor BC848/B Transistor	RN1404 (TE85L/R) Transistor RN1402 (TE85L/R) Transistor 2SC2712Y-R Transistor 2SC2712Y-R Transistor BC848/B Transistor
DUL R5A2 LTP.	**SECAM MODULE R5A2 P.C.B.**	**SECAM MODULE R5A2 PL**
de SMD	LL4448 Diode	LL4448 Diode
LC-Modul IC	TCV-2209P LC Module BA7207AS IC	TCV-2209P Module LC BA7207AS CI
ometer	2K2 Potentiometer	2K2 Potentiometre

Pos.	Art.-Nr Part No. Code	Bezeichnung	Part	Désignation
TC112	450.617.85	BC848/B Transistor SMD	BC848/B Transistor	BC848/B Transistor
TC119	109.662.00	RN1402 (TE85L/R) Transistor SSD	RN1402 (TE85L/R) Transistor	RN1402 (TE85L/R) Transistor
TC127	450.617.85	BC848/B Transistor SMD	BC848/B Transistor	BC848/B Transistor
TC128	450.539.85	BC858B SMD-TRANSISTOR 10ER-PACK	BC858/B Transistor	BC858/B Transistor
TC133,134	450.617.85	BC848/B Transistor SMD	BC848/B Transistor	BC848/B Transistor
TC135	203.438.80	RN2202 Transistor SMD	RN2202 Transistor	RN2202 Transistor
TC136-138	450.617.85	BC848/B Transistor SMD	BC848/B Transistor	BC848/B Transistor
TC139	109.662.00	RN1402 (TE85L/R) Transistor SSD	RN1402 (TE85L/R) Transistor	RN1402 (TE85L/R) Transistor
TC140	703.818.00	RN1404 (TE85L/R) Transistor SSD	RN1404 (TE85L/R) Transistor	RN1404 (TE85L/R) Transistor
M9523		**KDB R5CU1 LTP. KEY/DISPLAY**	**KDB R5CU1 P.C.B. KEY/DISPLAY**	**KDB R5CU1 P.KEY/DISPLAY**
DK040	905.665.20	ZMM4,7 Z-Diode SMD	ZMM4,7 Z-Diode	ZMM4,7 Z-Diode
GFK01	200.812.40	Fluoreszenzanzeige/Display 11-MT-83GK	Fluorescent display panel	Affichage
IK001	206.261.80	TMP47C416F-H844 IC FLAT	TMP47C416F-H844 IC	TMP47C416F-H844 CI
QK001	100.654.00	8MHZ Resonator	8MHZ Resonator	8MHZ Quartz
SK001-008	203.459.10	Taktschalter	Tact switch	Interrupteur de cadence
TK017,023	309.466.60	BC857B Transistor SMD	BC857B Transistor	BC857B Transistor
ZK001	203.840.40	GP1U283X IC IR Empfänger	GP1U283X IC Infrared receiver	GP1U283X CI Recept. infrar
M9625		**MB R5H20 LTP. MAIN**	**MB R5H20 P.C.B. MAIN**	**MB R5H20 PLATINE MAIN**
DV003,039	508.568.52	LL4448 Diode SMD	LL4448 Diode	LL4448 Diode
DZ002	100.409.50	LS4148 Diode SMD	LS4148 Diode SMD	LS4148 Diode SMD
DZ004,005	100.409.50	LS4148 Diode SMD	LS4148 Diode SMD	LS4148 Diode SMD
IT001	206.280.60	TMP90CS74DF-7904 C5T IC	TMP90CS74DF-7904 C5T IC	TMP90CS74DF-7904 C5T CI
TG031	450.539.85	BC858B SMD-TRANSISTOR 10ER-PACK	BC858/B Transistor	BC858/B Transistor
TV225	109.662.00	RN1402 (TE85L/R) Transistor SSD	RN1402 (TE85L/R) Transisto:	RN1402 (TE85L/R) Transistor
M9625		**TMB R5T12 TERMINAL BOARD KPL**	**TMB R5T12 PCB. ASSY**	**TMB R5T12 PLATINE EQ**
M9625		**KDB R5DU2 LTP.TIMER/DISPLAY**	**KDB R5DU2 P.C.B. TIMER/DISPLAY**	**KDB R5DU2 P.TIMER/DISPLAY**
DJ425	100.409.50	LS4148 Diode SMD	LS4148 Diode SMD	LS4148 Diode SMD
DK066	905.665.20	ZMM4,7 Z-Diode SMD	ZMM4,7 Z-Diode	ZMM4,7 Z-Diode
DK280	100.409.50	LS4148 Diode SMD	LS4148 Diode SMD	LS4148 Diode SMD
GK202-204	202.686.00	TSIP5201 IR-Diode	TSIP5201 IR-Diode	TSIP5201 IR-Diode
IK001	206.280.80	TMP87CS71F-6487 R5-N5T IC FLAT	TMP87CS71F-6487 R5-N5T IC	TMP87CS71F-6487 R5-N5T CI
TK206	803.888.00	2SA1162Y-R Transistor SMD	2SA1162Y-R Transistor	2SA1162Y-R Transistor
TK280	450.014.66	BC337-40 Transistor	BC337-40 Transistor	BC337-40 Transistor
M9625		**FCB R5DU1 LTP.FRONT CONNECTION**	**FCB R5DU1 PCB JACK**	**FCB R5DU1 PLATINE PRISE**
PK404	401.109.00	Buchse Kopfhörer 3,5mm HSJ1406-01-020	Headphone socket	Prise casque femelle
PK701	604.329.50	Buchse Cinch gelb JPJ1022-01-040 YE	Socket cinch yellow	Prise femelle cinch
PK702	404.824.60	Buchse Cinch JPJ1022-01-030 WH	Cinch socket	Prise cinch femelle
M9655		**MB R5H23 LTP. MAIN**	**MB R5H23 P.C.B. MAIN**	**MB R5H23 PLATINE MAIN**
DG030,034	100.409.50	LS4148 Diode SMD	LS4148 Diode SMD	LS4148 Diode SMD
DT013	100.409.50	LS4148 Diode SMD	LS4148 Diode SMD	LS4148 Diode SMD
DV003	508.568.52	LL4448 Diode SMD	LL4448 Diode	LL4448 Diode
DV029	508.568.52	LL4448 Diode SMD	LL4448 Diode	LL4448 Diode
DV126-128	508.568.52	LL4448 Diode SMD	LL4448 Diode	LL4448 Diode
DV182,186	508.568.52	LL4448 Diode SMD	LL4448 Diode	LL4448 Diode
DZ002	100.409.50	LS4148 Diode SMD	LS4148 Diode SMD	LS4148 Diode SMD
DZ004,005	100.409.50	LS4148 Diode SMD	LS4148 Diode SMD	LS4148 Diode SMD
IT001	206.280.60	TMP90CS74DF-7904 C5T IC	TMP90CS74DF-7904 C5T IC	TMP90CS74DF-7904 C5T CI
LN430	203.985.30	Bias Oszillator Spule 2213	Bias oscillator coil	Bias Bobine oscillatrice
LS030	204.679.10	Bias Oszillator Spule 70KHZ	Bias oscillator coil	Bias Bobine oscillatrice
PS034	420.346.00	47K 0,1W 30% Potentiometer V	47K 0,1W Potentiometer	47K 0,1W Potentiometre
RN441	150.096.60 S	18R 0,3W 5% Sicherheitswiderstand	18R 0,3W 5% Fusible resisto:	18R 0,3W 5% Resistance fusible
TG031	450.539.85	BC858B SMD-TRANSISTOR 10ER-PACK	BC858/B Transistor	BC858/B Transistor
TN430	202.475.50	2SC2859Y Transistor SMD	2SC2859Y Transistor	2SC2859Y Transistor
TN439	450.617.85	BC848/B Transistor SMD	BC848/B Transistor	BC848/B Transistor
TT004	202.448.30	2SA1162GR Transistor SMD	2SA1162GR Transistor	2SA1162GR Transistor
TV126	202.058.00	RN2402 Transistor SSD	RN2402 Transistor	RN2402 Transistor
TV186	109.662.00	RN1402 (TE85L/R) Transistor SSD	RN1402 (TE85L/R) Transistor	RN1402 (TE85L/R) Transistor
TV187	450.617.85	BC848/B Transistor SMD	BC848/B Transistor	BC848/B Transistor
TV225	109.662.00	RN1402 (TE85L/R) Transistor SSD	RN1402 (TE85L/R) Transistor	RN1402 (TE85L/R) Transistor

Pos.	Art.-Nr Part No. Code	Bezeichnung	Part	Désignation
M9655		**TMB R5T14 TERMINAL BOARD KPL**	**TMB R5T14 PCB. ASSY**	**TMB R5T14 PLATINE EQ**
M9655		**KDB R5DU2 LTP.TIMER/DISPLAY**	**KDB R5DU2 P.C.B. TIMER/DISPLAY**	**KDB R5DU2 P.TIMER/DISPLAY**
DJ425	100.409.50	LS4148 Diode SMD	LS4148 Diode SMD	LS4148 Diode SMD
DK066	905.665.20	ZMM4,7 Z-Diode SMD	ZMM4,7 Z-Diode	ZMM4,7 Z-Diode
DK280	100.409.50	LS4148 Diode SMD	LS4148 Diode SMD	LS4148 Diode SMD
GK202-204	202.686.00	TSIP5201 IR-Diode	TSIP5201 IR-Diode	TSIP5201 IR-Diode
IK001	206.280.80	TMP87CS71F-6487 R5-N5T IC FLAT	TMP87CS71F-6487 R5-N5T IC	TMP87CS71F-6487 R5-N5T CI
T8000		**MB R5H202 LTP. MAIN**	**MB R5H202 P.C.B. MAIN**	**MB R5H202 PLATINE MAIN**
DV003,039	508.568.52	LL4448 Diode SMD	LL4448 Diode	LL4448 Diode
IT001	205.852.30	TMP90CS74DF-7884 C1T IC	TMP90CS74DF-7884 C1T IC	TMP90CS74DF-7884 C1T CI
IT004	100.303.00	ST24C04/B1 IC SELBSTPROGR.	ST24C04/B1 IC	ST24C04/B1 CI
TG031	450.539.85	BC858B SMD-TRANSISTOR 10ER-PACK	BC858/B Transistor	BC858/B Transistor
T8000		**TMB R5T10 TERMINAL BOARD KPL**	**TMB R5T10 PCB. ASSY**	**TMB R5T10 PLATINE EQ**
T8000		**KDB R5DD1 LTP.TIMER/DISPLAY**	**KDB R5DD1 P.C.B. TIMER/DISPLAY**	**KDB R5DD1 P.TIMER/DISPLAY**
GKF01	202.153.60	Fluoreszenzanzeige/Display 11-MT-83GAK	Fluorescent display panel	Affichage
IK001	206.280.80	TMP47C416F-H844 IC FLAT	TMP47C416F-H844 IC	TMP47C416F-H844 CI
ZK001	201.309.10	TFMT5330 IC IR Empfänger	TFMT5330 IC Infrared receiver	TFMT5330 CI Recept. infrar.
T8000		**FCB R5DD1 LTP.FRONT CONNECTION**	**FCB R5DD1 PCB JACK**	**FCB R5DD1 PLATINE PRISE**
SK001,005	203.459.10	Taktschalter	Tact switch	Interrupteur de cadence
VP2601		**MB R5H209 LTP. MAIN**	**MB R5H209 P.C.B. MAIN**	**MB R5H209 PLATINE MAIN**
GT005,006	804.075.70	NM5 PT493F PH-Transistor	NM5 PT493F PH-Transistor	NM5 PT493F PH-Transistor
IT001	206.374.90	TMP90CS74DF C1S-1 IC	TMP90CS74DF C1S-1 IC	TMP90CS74DF C1S-1 CI
IT004	100.303.00	ST24C04/B1 IC SELBSTPROGR.	ST24C04/B1 IC	ST24C04/B1 CI
QV018	202.637.20	4,433619MHZ Quarz	4,433619MHZ Crystal	4,433619MHZ Quartz
ST002	101.376.10	SPPB62 Druckschalter	SPPB62 Push switch	SPPB62 Commutateur poussoir
VP2601		**TMB R5T10 TERMINAL BOARD KPL**	**TMB R5T10 PCB. ASSY**	**TMB R5T10 PLATINE EQ**
BX205	600.689.00	Buchse Euro AV BK2093 SCART	Scart socket	Prise femelle peritelevision
BX206	102.517.20	Buchse Euro AV BU2093 SCART	Scart socket	Prise femelle peritelevision
IS001	101.220.10	BA7795LS IC	BA7795LS IC	BA7795LS CI
IX020	110.079.92	HEF4052/BT IC SMD	HEF4052/BT IC	HEF4052/BT CI
IX040	202.303.00	HEF4053/BT IC	HEF4053/BT IC	HEF4053/BT CI
IX201	101.066.70	STV6400 IC	STV6400 IC	STV6400 CI
TS040	703.818.00	RN1404 (TE85L/R) Transistor SSD	RN1404 (TE85L/R) Transistor	RN1404 (TE85L/R) Transistor
TS045	109.662.00	RN1402 (TE85L/R) Transistor SSD	RN1402 (TE85L/R) Transistor	RN1402 (TE85L/R) Transistor
TX013	703.828.00	2SC2712Y-R Transistor SMD	2SC2712Y-R Transistor	2SC2712Y-R Transistor
TX050,070	703.828.00	2SC2712Y-R Transistor SMD	2SC2712Y-R Transistor	2SC2712Y-R Transistor
TX200	450.617.85	BC848/B Transistor SMD	BC848/B Transistor	BC848/B Transistor
TX213	160.009.00	BC547C Transistor	BC547C Transistor	BC547C Transistor
VP2601		**KDB R5DV1 LTP.TIMER/DISPLAY**	**KDB R5DV1 P.C.B. TIMER/DISPLAY**	**KDB R5DV1 P.TIMER/DISPLAY**
DK040	905.665.20	ZMM4,7 Z-Diode SMD	ZMM4,7 Z-Diode	ZMM4,7 Z-Diode
GKF01	200.812.40	Fluoreszenzanzeige/Display 11-MT-83GK	Fluorescent display panel	Affichage
IK001	206.261.80	TMP47C416F-H844 IC FLAT	TMP47C416F-H844 IC	TMP47C416F-H844 CI
QK001	100.654.00	8MHZ Resonator	8MHZ Resonator	8MHZ Quartz
SK002,004	203.459.10	Taktschalter	Tact switch	Interrupteur de cadence
SK006,008	203.459.10	Taktschalter	Tact switch	Interrupteur de cadence
TK017,023	309.466.60	BC857B Transistor SMD	BC857B Transistor	BC857B Transistor
ZK001	203.840.40	GP1U283X IC IR Empfänger	GP1U283X IC Infrared receiver	GP1U283X CI Recept. infrar
VP2601		**FCB R5DV1 LTP.FRONT CONNECTION**	**FCB R5DV1 PCB JACK**	**FCB R5DV1 PLATINE PRISE**
SK001,003	203.459.10	Taktschalter	Tact switch	Interrupteur de cadence
SK005,007	203.459.10	Taktschalter	Tact switch	Interrupteur de cadence
VP2651		**MB R5H400 LTP. MAIN**	**MB R5H400 P.C.B. MAIN**	**MB R5H400 PLATINE MAIN**
IT001	206.280.60	TMP90CS74DF-7904 C5T IC	TMP90CS74DF-7904 C5T IC	TMP90CS74DF-7904 C5T CI
TV225	109.662.00	RN1402 (TE85L/R) Transistor SSD	RN1402 (TE85L/R) Transistor	RN1402 (TE85L/R) Transistor

Pos.	Art.-Nr Part No. Code	Bezeichnung	Part	Désignation
		ALLGEMEINE TEILE:	**GENERAL PARTS:**	**PIECES DIVERS:**
		ZUBEHÖR /BEIPACK	**ACCESSORIES**	**ACCESSOIRES**
V1250SVM	205.782.20	RC5205M IR-GEBER	RC5205M REMOTE CONTR. UNIT	RC5205M TELECOMMANDE
V1450SVM	205.782.20	RC5205M IR-GEBER	RC5205M REMOTE CONTR. UNIT	RC5205M TELECOMMANDE
V1455SEN	204.294.70	RC5209X IR-GEBER	RC5209X REMOTE CONTR. UNIT	RC5209X TELECOMMANDE
VR7021	205.865.30	TC621 IR-GEBER RC5402X	TC621 REMOTE CONTR. UNIT	TC621 TELECOMMANDE
VR7041	205.865.30	TC621 IR-GEBER RC5402X	TC621 REMOTE CONTR. UNIT	TC621 TELECOMMANDE
M9523	205.681.20	RC5105M IR-GEBER	RC5105M REMOTE CONTR. UNIT	RC5105M TELECOMMANDE
M9625	205.865.10	RC5105MX IR-GEBER	RC5105MX REMOTE CONTR. UNIT	RC5105MX TELECOMMANDE
M9655	205.864.70	RC5106M IR-GEBER	RC5106M REMOTE CONTR. UNIT	RC5106M TELECOMMANDE
T8000	205.865.50	RC5104N IR-GEBER	RC5104N REMOTE CONTR. UNIT	RC5104N TELECOMMANDE
VP2601	205.781.80	RC5003N IR-GEBER	RC5003N REMOTE CONTR. UNIT	RC5003N TELECOMMANDE
VP2651	206.350.20	RC5005MX IR-GEBER	RC5005MX REMOTE CONTR. UNIT	RC5005MX TELECOMMANDE
VP4601	206.350.00	RC5004NX IR-GEBER	REMOTE CONTROL RC5004NX	TLC RC5004NX
VP4681	205.781.80	RC5003N IR-GEBER	RC5003N REMOTE CONTR. UNIT	RC5003N TELECOMMANDE
VP4681	206.133.10	RC5008M IR-GEBER	RC5008M REMOTE CONTR. UNIT	RC5008M TELECOMMANDE
-	100.801.90	Antennenkabel	Antenna cable	Câble HF
-	620.697.00 S	Netzanschlussleitung	Power cord	Câble secteur
V1455SEN	100.467.00	Anschlusskabel Cinch	Connection lead Cinch	Cordon de liaison Cinch
V1455SEN	204.182.60	Scartkabel VOLL 370MM	Scart cable AV FULL	Scart cable AV FULL
M9655	103.861.80	EDIT CABLE 1500MM	EDIT CABLE 1500MM	EDIT CABLE 1500MM
VP4681	103.861.80	EDIT CABLE 1500MM	EDIT CABLE 1500MM	EDIT CABLE 1500MM
		SERVICE-UNTERLAGEN	**SERVICE INFORMATIONS**	**NOTICE TECHNIQUE**
V1250SVM	206.476.80	BA V1250/1450SVM Inst.Anltg. D/I/S/DK/F	Instruction booklet IG	Notice d'utilisation IG
V1250SVM	206.476.90	BA V1250/1450SVM Bedienung D/I/S/DK/F	Instruction booklet UG	Notice d'utilisation UG
V1450SVM	206.476.80	BA V1250/1450SVM Inst.Anltg. D/I/S/DK/F	Instruction booklet IG	Notice d'utilisation IG
V1455SVM	206.476.90	BA V1250/1450SVM Bedienung D/I/S/DK/F	Instruction booklet UG	Notice d'utilisation UG
V1455SEN	204.295.50	BA V1455SENS Inst.Anltg. D/I/GB	Instruction booklet IG	Notice d'utilisation IG
V1455SEN	204.295.60	BA V1455SENS Bedienung D/I/GB	Instruction booklet UG	Notice d'utilisation UG
V1455SEN	205.465.80	Hinweiszettel 2.FB TC545/R5474G	Instruction note	Notes importantes
VR7021	206.177.10	BA VR7021/7041 Bedienung D/I/F/NL/S	Instruction booklet UG	Notice d'utilisation UG
VR7021	206.177.20	BA VR7021/7041 Inst.Anltg. D/I/F/NL/S	Instruction booklet IG	Notice d'utilisation IG
VR7041	206.177.10	BA VR7021/7041 Bedienung D/I/F/NL/S	Instruction booklet UG	Notice d'utilisation UG
VR7041	206.177.20	BA VR7021/7041 Inst.Anltg. D/I/F/NL/S	Instruction booklet IG	Notice d'utilisation IG
M9523	206.125.60	BA M9523 Inst.Anltg. F/GB IG	Instruction booklet IG	Notice d'utilisation IG
M9523	206.125.70	BA M9523 Bedienung F/GB UG	Instruction booklet UG	Notice d'utilisation UG
M9625	206.371.50	BA M9625 Bedienung D/I/E/F/S/NL	Instruction booklet UG	Notice d'utilisation UG
M9625	206.371.60	BA M9625 Inst.Anltg. D/I/E/F/S/NL	Instruction booklet IG	Notice d'utilisation IG
M9655	206.120.40	BA M9655 Bedienung D/I/E/P/S/DK	Instruction booklet UG	Notice d'utilisation UG
M9655	206.120.50	BA M9655 Inst.Anltg. D/I/E/P/S/DK	Instruction booklet IG	Notice d'utilisation IG
T8000	206.187.30	BA T8000 Inst.Anltg.IG D/I/E	Instruction booklet IG	Notice d'utilisation IG
T8000	206.187.40	BA T8000 Bedienung UG D/I/E	Instruction booklet UG	Notice d'utilisation UG
VP2601	206.350.70	BA VP2601 Inst.Anltg. IG	Instruction booklet IG	Notice d'utilisation IG
VP2601	206.350.80	BA VP2601 Bedienung UG	Instruction booklet UG	Notice d'utilisation UG
VP2651	206.354.10	BA VP2651 Bedienung D/I/E/F/S/P	Instruction booklet UG	Notice d'utilisation UG
VP2651	206.354.20	BA VP2651 Inst.Anltg. D/I/E/F/S/P	Instruction booklet IG	Notice d'utilisation IG
VP4601	206.353.90	BA VP4601 Inst.Anltg. D/I/E/P/PL/CZ/H	Instruction booklet IG	Notice d'utilisation IG
VP4601	206.354.00	BA VP4601 Bedienung D/I/E/P/PL/CZ/H	Instruction booklet UG	Notice d'utilisation UG
VP4681	206.354.30	BA VP4681 Inst.Anltg. D/I/E/F/S/P	Instruction booklet IG	Notice d'utilisation IG
VP4681	206.354.40	BA VP4681 Bedienung D/I/E/F/S/P	Instruction booklet UG	Notice d'utilisation UG

Pos.	Art.-Nr Part No. Code		Bezeichnung	Part	Désignation
VP2651			**TMB R5T12 TERMINAL BOARD KPL**	**TMB R5T12 PCB. ASSY**	**TMB R5T12 PLATINE EQ**
VP2651			**KDB R5CV1 LTP.TIMER/DISPLAY**	**KDB R5CV1 P.C.B. TIMER/DISPLAY**	**KDB R5CV1 P.TIMER/DISPLAY**
DJ425	160.124.50		LL4148 Diode SMD	LL4148 Diode SMD	LL4148 Diode SMD
DK066	905.665.20		ZMM4,7 Z-Diode SMD	ZMM4,7 Z-Diode	ZMM4,7 Z-Diode
DK280	160.124.50		LL4148 Diode SMD	LL4148 Diode SMD	LL4148 Diode SMD
GK202-204	202.686.00		TSIP5201 IR-Diode	TSIP5201 IR-Diode	TSIP5201 IR-Diode
IK001	206.280.80		TMP87CS71F-6487 R5-N5T IC FLAT	TMP87CS71F-6487 R5-N5T IC	TMP87CS71F-6487 R5-N5T CI
PK404	401.109.00		Buchse Kopfhörer 3,5mm HSJ1406-01-020	Headphone socket	Prise casque femelle
TK206	803.888.00		2SA1162Y-R Transistor SMD	2SA1162Y-R Transistor	2SA1162Y-R Transistor
TK280	450.014.66		BC337-40 Transistor	BC337-40 Transistor	BC337-40 Transistor
VP2651			**FCB R5CV1 LTP.FRONT CONNECTION**	**FCB R5CV1 PCB JACK**	**FCB R5CV1 PLATINE PRISE**
PK701	604.329.50		Buchse Cinch gelb JPJ1022-01-040 YE	Socket cinch yellow	Prise femelle cinch
PK702	404.824.60		Buchse Cinch JPJ1022-01-030 WH	Cinch socket	Prise cinch femelle
VP4601			**MB R5H401 LTP. MAIN**	**MB R5H401 P.C.B. MAIN**	**MB R5H401 PLATINE MAIN**
DG030,034	100.409.50		LS4148 Diode SMD	LS4148 Diode SMD	LS4148 Diode SMD
DT013	100.409.50		LS4148 Diode SMD	LS4148 Diode SMD	LS4148 Diode SMD
DV029	508.568.52		LL4448 Diode SMD	LL4448 Diode	LL4448 Diode
DV126-128	508.568.52		LL4448 Diode SMD	LL4448 Diode	LL4448 Diode
DV182,186	508.568.52		LL4448 Diode SMD	LL4448 Diode	LL4448 Diode
DZ002,004	100.409.50		LS4148 Diode SMD	LS4148 Diode SMD	LS4148 Diode SMD
DZ006	440.357.02		ZPD5,1 2% Z-Diode	ZPD5,1 2% Z-Diode	ZPD5,1 2% Z-Diode
FZ050	100.009.20		6MHZ Keramikfilter	6MHZ Ceramic filter	6MHZ Filtre ceramique
IT001	206.280.60		TMP90CS74DF-7904 C5T IC	TMP90CS74DF-7904 C5T IC	TMP90CS74DF-7904 C5T CI
IV100	203.375.90		LA7356M IC	LA7356M IC	LA7356M CI
RW012	150.096.40	S	27R 0,3W 5% Sicherheitswiderstand	27R 0,3W 5% Fusible resistor	27R 0,3W 5% Résistance fusible
RW021	410.985.09	S	5R6 0,3W 5% Sicherheitswiderstand	5R6 0,3W 5% Fusible resistor	5R6 0,3W 5% Resistance fusible
TV126	202.058.00		RN2402 Transistor SSD	RN2402 Transistor	RN2402 Transistor
TV186	109.662.00		RN1402 (TE85L/R) Transistor SSD	RN1402 (TE85L/R) Transistor	RN1402 (TE85L/R) Transistor
TV187	450.617.85		BC848/B Transistor SMD	BC848/B Transistor	BC848/B Transistor
TV225	109.662.00		RN1402 (TE85L/R) Transistor SSD	RN1402 (TE85L/R) Transistor	RN1402 (TE85L/R) Transistor
VP4601			**TMB R5T10 TERMINAL BOARD KPL**	**TMB R5T10 PCB. ASSY**	**TMB R5T10 PLATINE EQ**
VP4601			**KDB R5AD3 LTP.TIMER/DISPLAY**	**KDB R5AD3 P.C.B. TIMER/DISPLAY**	**KDB R5AD3 P.TIMER/DISPLAY**
DJ66	905.665.20		ZMM4,7 Z-Diode SMD	ZMM4,7 Z-Diode	ZMM4,7 Z-Diode
IK001	206.280.80		TMP87CS71F-6487 R5-N5T IC FLAT	TMP87CS71F-6487 R5-N5T IC	TMP87CS71F-6487 R5-N5T CI
ZK01	201.309.10		TFMT5330 IC IR Empfänger	TFMT5330 IC Infrared receiver	TFMT5330 CI Recept. infrar.
VP4601			**FCB R5AD1 LTP. FRONT**	**FCB R5AD1 PCB JACK**	**FCB R5AD1 PLATINE PRISE**
SK09,10	203.459.10		Taktschalter	Tact switch	Interrupteur de cadence
VP4681			**MB R5H402 LTP. MAIN**	**MB R5H402 P.C.B. MAIN**	**MB R5H402 PLATINE MAIN**
DV029	508.568.52		LL4448 Diode SMD	LL4448 Diode	LL4448 Diode
DV126-128	508.568.52		LL4448 Diode SMD	LL4448 Diode	LL4448 Diode
DV182,186	508.568.52		LL4448 Diode SMD	LL4448 Diode	LL4448 Diode
IT001	206.280.60		TMP90CS74DF-7904 C5T IC	TMP90CS74DF-7904 C5T IC	TMP90CS74DF-7904 C5T CI
LN430	203.985.30		Bias Oszillator Spule 2213	Bias oscillator coil	Bias Bobine oscillatrice
LS030	204.679.10		Bias Oszillator Spule 70KHZ	Bias oscillator coil	Bias Bobine oscillatrice
RN441	150.096.60	S	18R 0,3W 5% Sicherheitswiderstand	18R 0,3W 5% Fusible resistor	18R 0,3W 5% Resistance fusible
TN430	202.475.50		2SC2859Y Transistor SMD	2SC2859Y Transistor	2SC2859Y Transistor
TN439	450.617.85		BC848/B Transistor SMD	BC848/B Transistor	BC848/B Transistor
TT004	202.448.30		2SA1162GR Transistor SMD	2SA1162GR Transistor	2SA1162GR Transistor
TV126	202.058.00		RN2402 Transistor SSD	RN2402 Transistor	RN2402 Transistor
TV171	109.662.00		RN1402 (TE85L/R) Transistor SSD	RN1402 (TE85L/R) Transistor	RN1402 (TE85L/R) Transistor
TV187	450.617.85		BC848/B Transistor SMD	BC848/B Transistor	BC848/B Transistor
TV225	109.662.00		RN1402 (TE85L/R) Transistor SSD	RN1402 (TE85L/R) Transistor	RN1402 (TE85L/R) Transistor
VP4681			**TMB R5T14 TERMINAL BOARD KPL**	**TMB R5T14 PCB. ASSY**	**TMB R5T14 PLATINE EQ**
VP4681			**KDB R5CV1 LTP.TIMER/DISPLAY**	**KDB R5CV1 P.C.B. TIMER/DISPLAY**	**KDB R5CV1 P.TIMER/DISPLAY**
DJ425	160.124.50		LL4148 Diode SMD	LL4148 Diode SMD	LL4148 Diode SMD
IK001	206.280.80		TMP87CS71F-6487 R5-N5T IC FLAT	TMP87CS71F-6487 R5-N5T IC	TMP87CS71F-6487 R5-N5T CI
VP4681			**FCB R5CV1 LTP.FRONT CONNECTION**	**FCB R5CV1 PCB JACK**	**FCB R5CV1 PLATINE PRISE**

MECHANICAL PARTS (1)

LUBRICATION POINTS
Ⓗ = GREASE

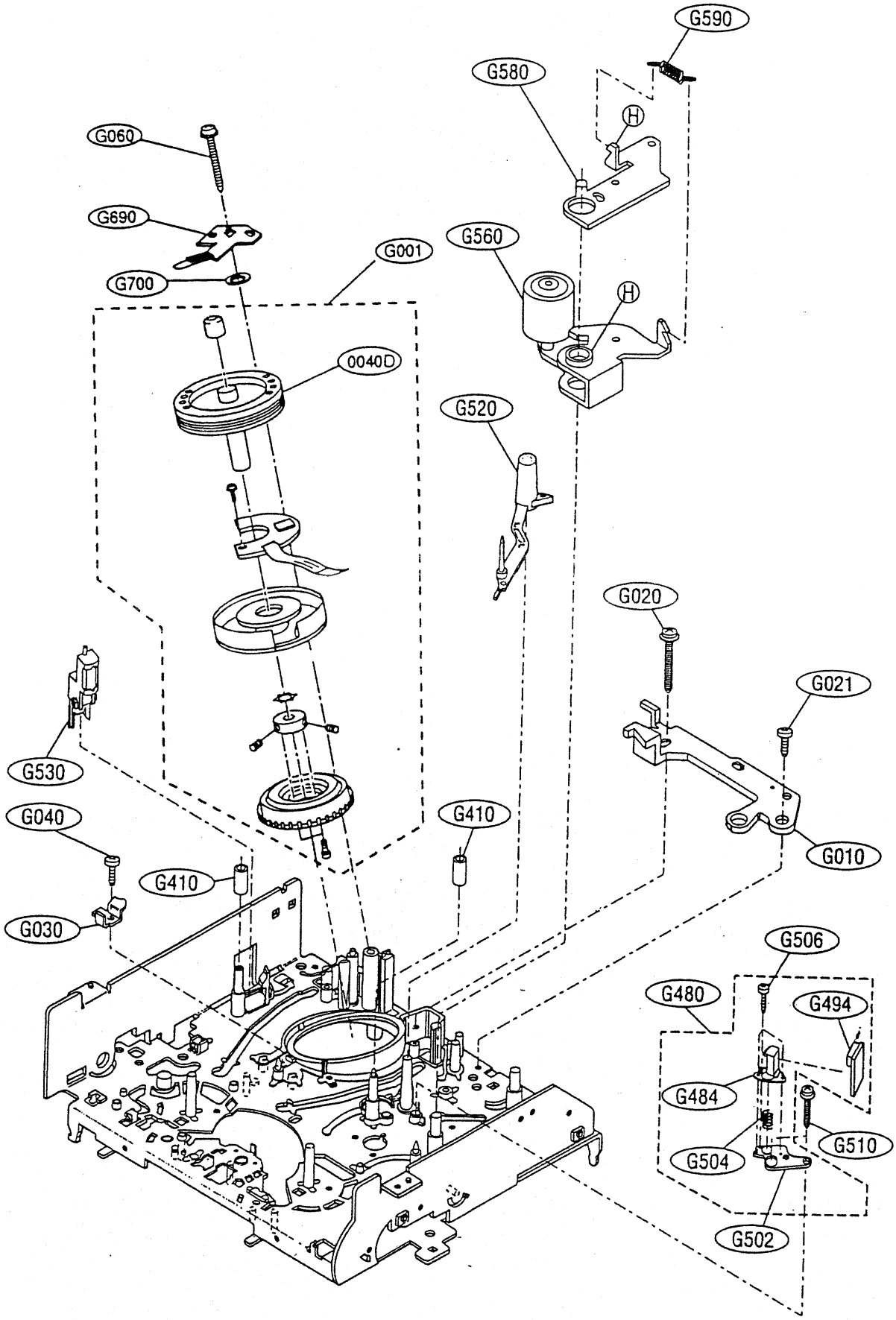

CHASSIS VIEW

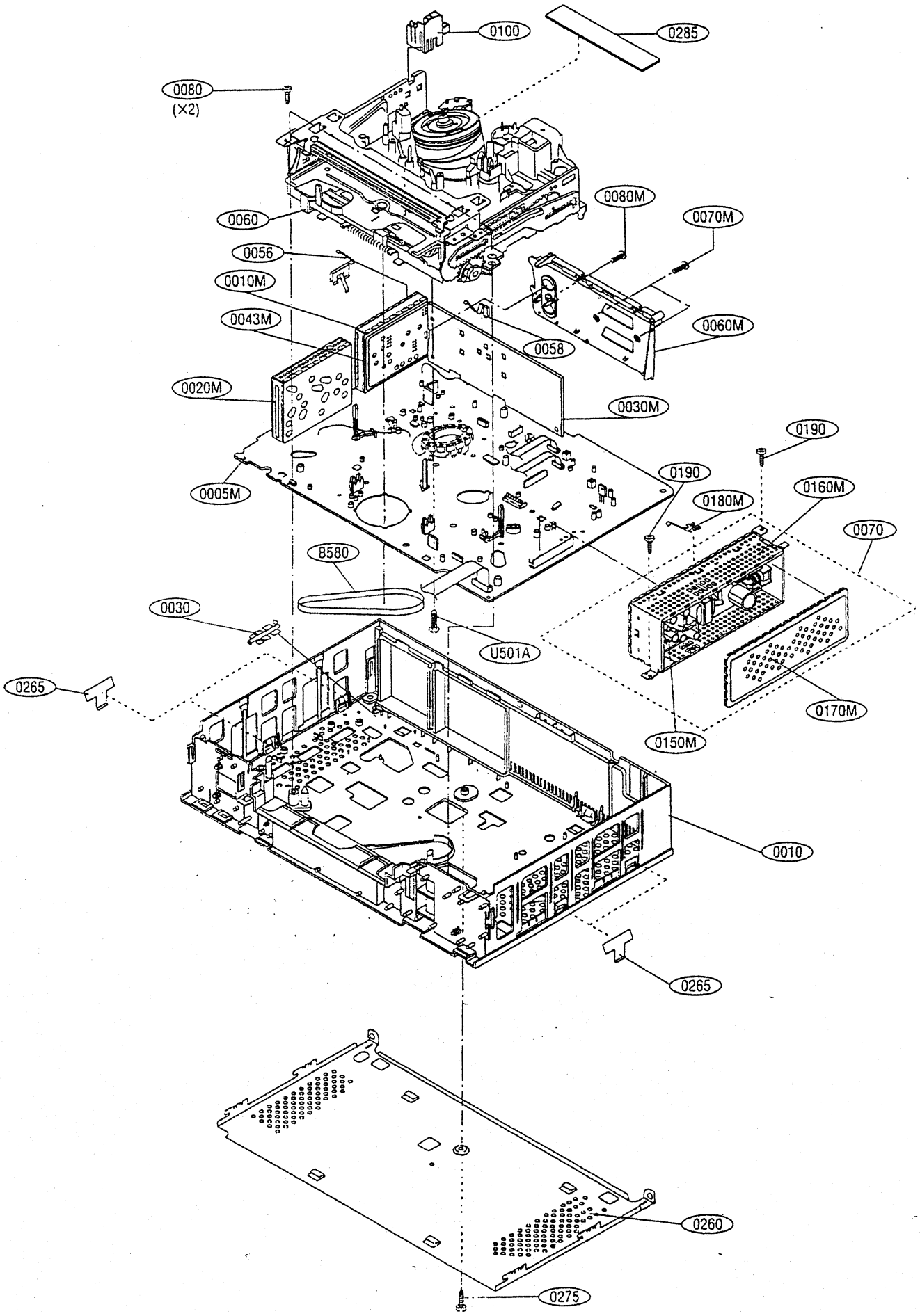

LUBRICATION POINTS
(H) = GREASE
(S) = OIL

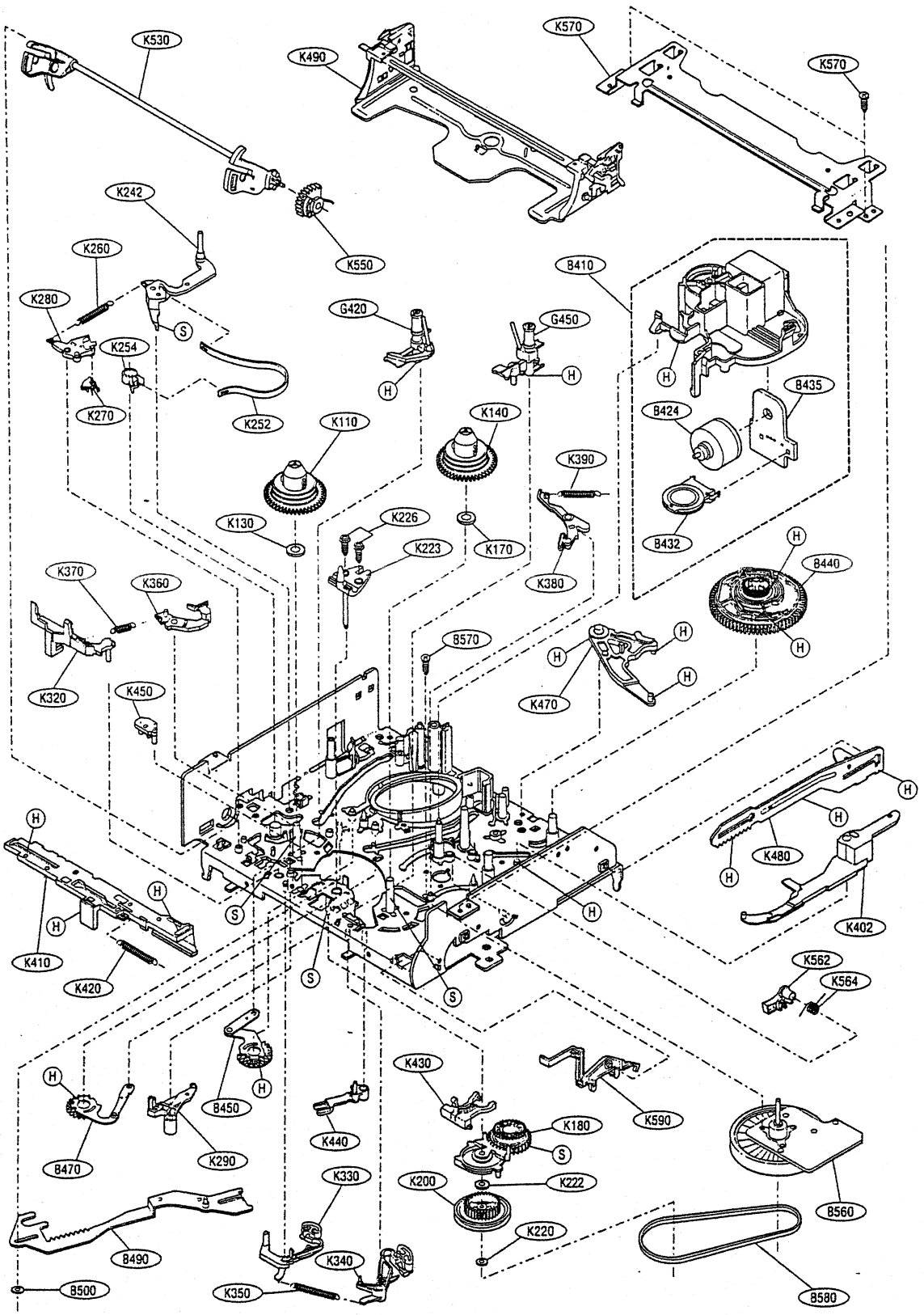

Technical documentation to be used by maintenance technicians only • Documentation technique exclusivement destinée aux professionnels de la maintenance • Diese Angaben und Hinweise sind ausschließlich für den Service des Fachhändlers bestimmt • Documentazione tecnica destinata esclusivamente ai tecnici dell'assistenza • Documentación técnica destinada exclusivamente a los profesionales de mantenimiento

THOMSON multimedia Sales UK Limited
CROWN ROAD, ENFIELD, MIDDLESEX EN1 1DZ (ENGLAND)
TEL. : 0181 344 4444 • FAX. : 0181 344 4452

THOMSON CONSUMER ELECTRONICS MARKETING FRANCE
Services
19, AVENUE DUBONNET - B.P. 25
92403 COURBEVOIE CEDEX
TEL. : 01 46.91 36 00
S.A. AU CAPITAL DE 200 000 000 F

THOMSON multimedia Sales Germany GmbH & Co. oHG
- Service -
GÖTTINGER CHAUSSEE 76 • 30453 HANNOVER

THOMSON multimedia Sales Italy S.p.a.
VIA LEONARDO DA VINCI 43
20090 TREZZANO SUL NAVIGLIO • MILANO
TEL. : (02) 48 414 320 • FAX. : (02) 48 414 325

THOMSON multimedia Sales Spain
AVENIDA de BURGOS 8A • 28036 • MADRID

The description and characteristics given here are of informative significance only, and non committal. To keep up the high quality of our products, we reserve the right to make any changes or improvement without previous notice. • Les descriptions et caractéristiques figurant sur ce document sont données à titre d'information et non d'engagement. En effet, soucieux de la qualité de nos produits, nous nous réservons le droit d'effectuer, sans préavis, toute modification ou amélioration. • Die Beschreibungen und Daten in dieser Anleitung dienen nur zur Information und sind nicht bindend. Um die Qualität unserer Produkte ständig zu verbessern, behalten wir uns das Recht auf Änderungen vor. • Le descrizioni e le caratteristiche date su questo documento sono fornite a semplice titolo informativo e senza impegno. Ci riserviamo il diritto di eseguire, senza preavviso, qualsiasi modifica o miglioramento. • Las descripciones y características que figuran en este documento se dan a título de información y no de compromiso. En efecto, en bien de la calidad de nuestros productos, nos reservamos el derecho de efectuar, sin previo aviso, cualquier modificación o mejora.